The ERP-MICSS Case:

The Smart Industries Inc. Case Study

Basic Instructions for Activating the ERPBOOK Scenario

The installation should have created an icon for MICSS (Management Interactive Case Study Simulator). Once you have this icon all you need to do is to double click on it.
If you have lost the icon, look for the folder the simulator files are in and look for the file mics32.exe using Explorer. Double clicking on the program will invoke the simulation.

A window containing basic information on MICSS appears. Click OK to continue.
An Open window is shown with the entry erpbook.mcb. Mark the file and click on Open.
A message stating that the program is licensed only for personal use appears for few seconds.

You are now within the program. The following document will give you a good idea on how to find your way within the simulated case. Then you should also go through the tutorial and guided runs.
To access the tutorial, click on the Sessions menu at the top of the screen. Click on Tutorial. After going through the tutorial, we recommend to open the Sessions menu again and go through the two guided runs.

After trying your best with the simulator you should turn to the two documents describing how to run the virtual case study and **win.**

A Specific, Nontrivial MICSS Scenario

The Smart Industries Inc. case study is intended for people who are ready to face a real semi-complex environment with fairly good integrative information system. To start with, this is a company that sells only three different products, produced by six different work-centers, using only four materials.

Smart Industries Inc. has four different views: Marketing, Production, Purchasing and Finance. It is the combined efforts of all four that generates success or failure. At any moment you can move to any other view by clicking on one of the following buttons at the top of the main window:

Figure A.1 The four main views of the virtual company.

In our tour of the Smart Industries company, let us first start with its financial state. Click on the Finance View. The date is 1/1/02, this is shown on the top left side of the screen.

Presented here is the profit and loss statement for 2001. A simple glance will be sufficient to know why a new management team is sought.

Profit and Loss Statement

☑ With added value on FG and WIP

From: 01/01/01
To: 12/31/01

Sales	2,849,640
Cost of goods sold:	
Raw materials consumed	1,432,996
Direct labor	276,000
Production expenses	168,000
Depreciation	420,000
Production cost	2,296,996
Increase in FG inv	28,804
Increase in WIP	47,158
Gross profit	628,606
Marketing and sales expenses	378,000
Management and general expenses	396,000
Profit before finance	-145,394
Finance expenses	-13,755
Profit before taxes	-131,639
Net profit	-131,639

Figure A.2 Profit and loss statement for 2001.

Just for clarity, these results were achieved by actually running the virtual company (by the means of simulation) throughout 2001. Obviously, not all the policies and actions taken by the former management were good.

In spite of the gloomy financial state, this company has quite a good reputation in the market. The customers value very much the reliability provided by Smart Industries Inc.

The full screen of MICSS, with the view of the Marketing and Sales department is shown in Figure A.3 (click on the Marketing button). The three products have schematic names: A1, B1, and C1.

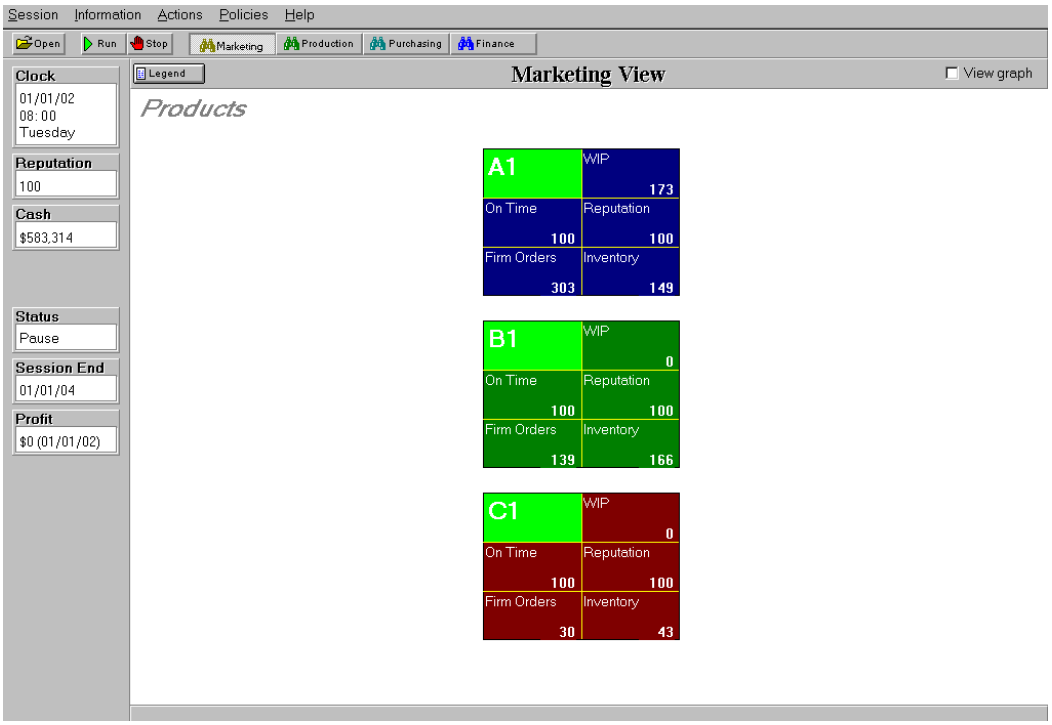

Figure A.3 MICSS marketing view.

Every box contains the firm orders it has to supply, the finished goods (FG) stock that is ready for delivery exactly on time. The reputation mark, at the product's box, relates to that product market segment. To the left of the reputation mark an internal management measure for the on-time deliveries is shown. This measure looks only on the current month percentage of the on time shipments. WIP, showing at the right upper side of the product box, stands for work-in-process. That means the units that are somewhere within the production shop floor. Of course, the full information system lets you access the exact location of the WIP. We will come to that later.

Every view has its own Information, Actions, and Policies menus. The Policies menu includes those managerial decisions that dictate the behavior of the information system and also the employees.

Figure A.4 shows the Policies menu of the Marketing View (click on Policies and then on Product Parameters). It contains the main sales policies. The quoted lead times are expressed in working days. This company works 5 days a week 8 hours per day throughout the year. Hence, 30 days are equivalent to 6 weeks. This means every order accepted today is given a due-date 6 weeks from now. Reduction in the quoted lead-time (QLT) is one of the means to expand the market demand. Similarly the selling price is such a mean.

Edit Product Parameters

	Quoted Lead Time	Price	Safety Stock	Red Line Time
A1	30	500	0	5
B1	30	1000	0	5
C1	30	1500	0	5

OK Cancel Help

Figure A.4 Policies menu of the Marketing View.

The Red Line Time is part of a control mechanism. The assigned 5 days as the red line time means that when there are not enough units in the finished goods area to ship all the next 5 days of shipments, the product ID will be colored in red to signal a warning to the management. The work orders that are still in the shop floor that are needed for the next 5 days shipments are acknowledged as “red order”. This is one of the most important features of the information system. On top of the product ID color you would get a red warning message at the top of the screen. Clicking on it will point to the red orders.

The Information menu, at the top of the screen, includes several important entries. Click on the Information button and then on Sales Summary Graph. Here is a piece of information that is obviously very important. What did last year sales look like? Here is a graph that can be found in the Information menu of the Marketing View:

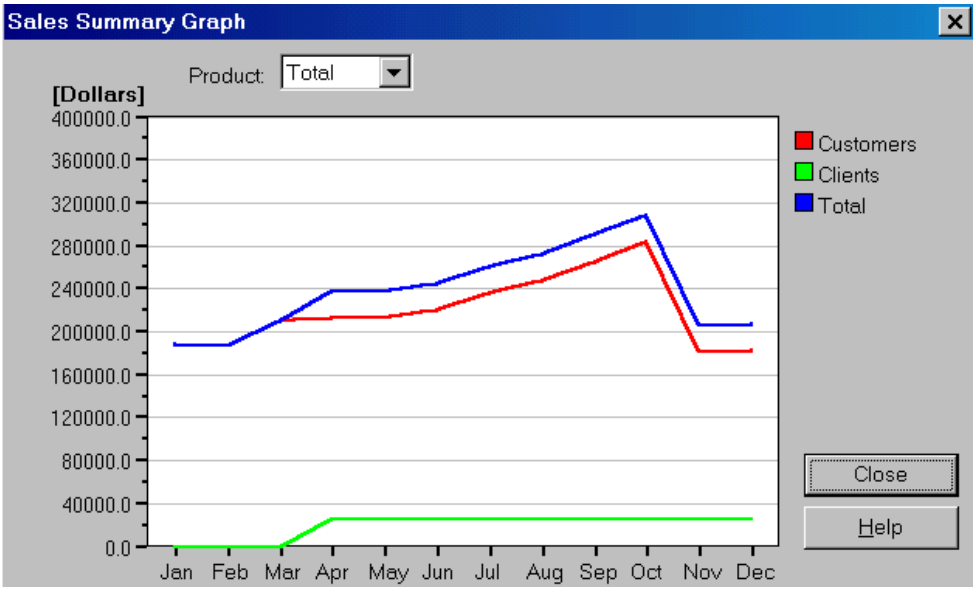

Figure A.5 2001 sales.

At the bottom of the graph we see a green line that the legend displays as clients. This is a whole market segment that currently the company uses very scarcely. This segment

consists of large clients that buy only according to their terms. This segment may provide some additional opportunities next year – but, beware, those clients offer low prices. This is one of the crucial decisions you'll have to make.

The red line represents the main company's market: small customers who come, order, pay the list price and take the merchandise at exactly the day it is due. Look at the graph — there is a upward trend of the sales from June to October. There is no need for doubt — there is a seasonal peak of demand. How big is the peak? Does it stretch really from June and peak in October? Is it a real trend or is it a coincidence? The information system has real difficulty is telling you that. You can, of course, analyze the graph, but assuming that there is a significant noise from the uncertain environment we cannot tell for certain how big is the peak relative to the regular month or average month. However, certain seasonality does exist somewhere in the June–October period. As we'll see later the current QLT is 6 weeks. Thus all October sales were generated from orders received in August–September.

Let us now continue our tour into the Production View (click on the Production button). The shop floor looks like this:

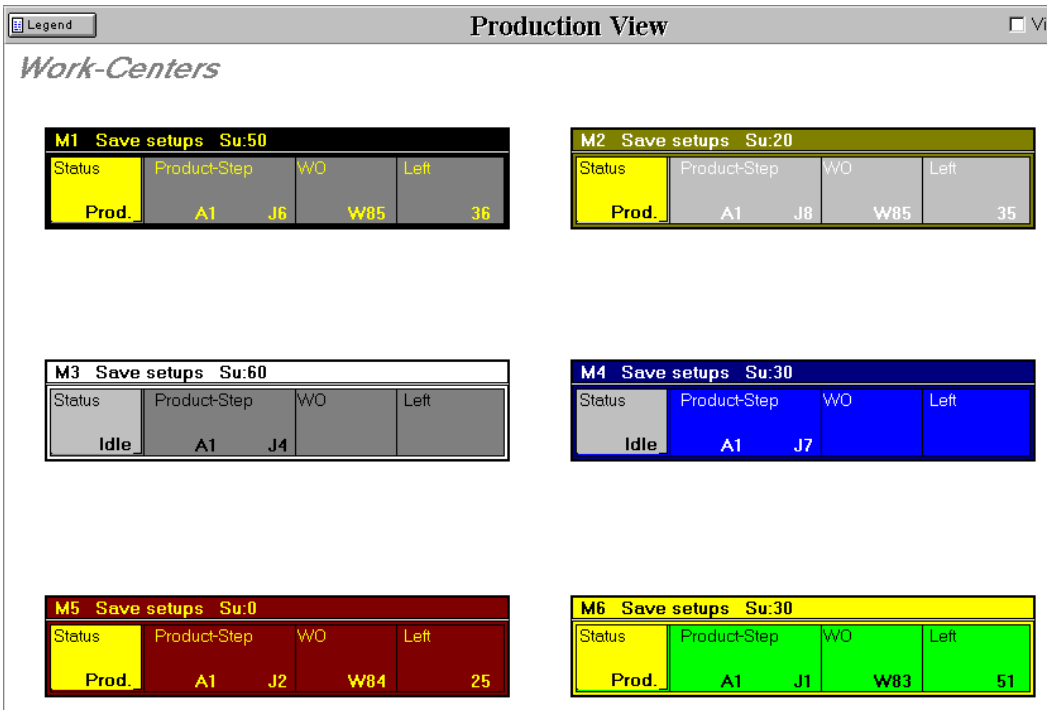

Figure A.6 Production View — shop floor.

Every rectangle represents a work center. All we have in this manufacturing organization are six work centers. Every work center has only one machine.

There is another look to the Production View. At the top right of the screen you have a field titled View Graph. Mark it and you will get:

Work-Centers

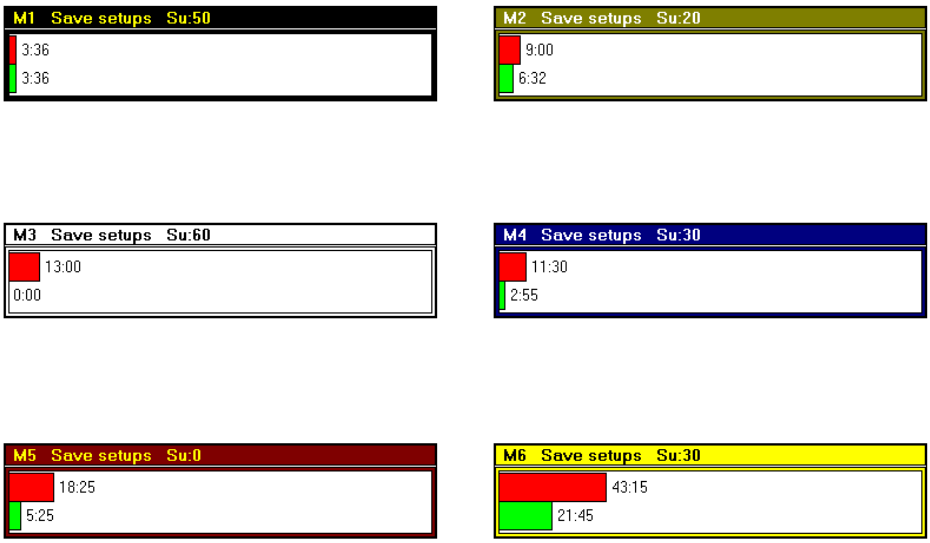

Figure A.7 The planned load — the accumulating load expressed in hours.

The red bar represents the accumulated load for each work center based on all planned work orders. M5, for instance, has 18 hours and 25 minutes of work to process all the open orders that should pass through it.
The green bar represents the work that is now available at the work center's site. So, out of planned work of 43 hours and 15 minutes for M6, the work center has already at the site work that should take 21 hours and 45 minutes.

After reading so much about Enterprise Resource Planning (ERP) you surely like to know the bill of material (BOM) and the routings. In this small company we have preferred to show a somewhat different representation of both. As a matter of fact, we've combined the BOM and the routing into one. Here is the description of how each of the end products is made (click on Information and then on All Products Routing).

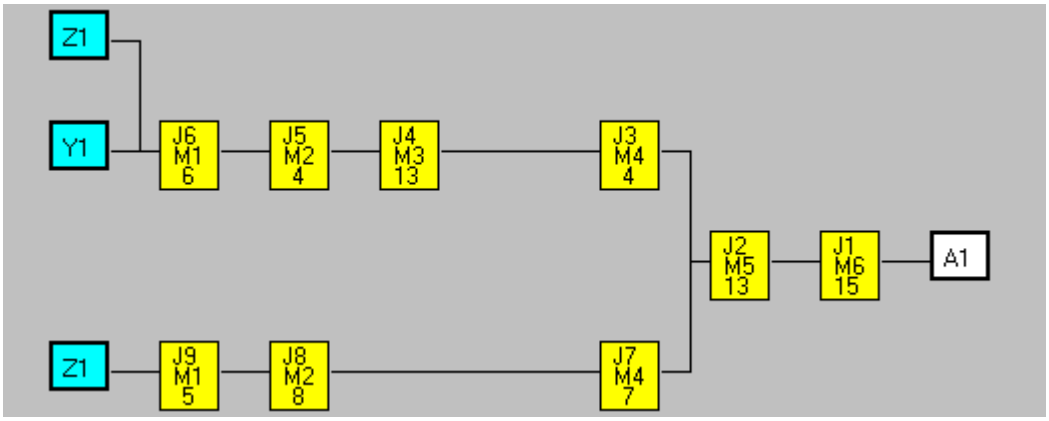

Figure A.8 Combined BOM and routing for product A1.

This is just the combined BOM-routings for product A1. The flow is from left to right. A1 is an assembly of two parts. One is made of materials Z1 and Y1 going into machine M1 for 6 minutes time-per-part (TPP), then M2 for 4 minutes, M3 for 13 minutes, and M4 for another 4 minutes. The other part is build from material Z1, going through M1, M2, and M4. Then the two parts are assembled by M5 and packed by M6. Every operation has its own ID starting with the letter J.

B1 is a somewhat more complicated product to make. We sell it for much higher price.

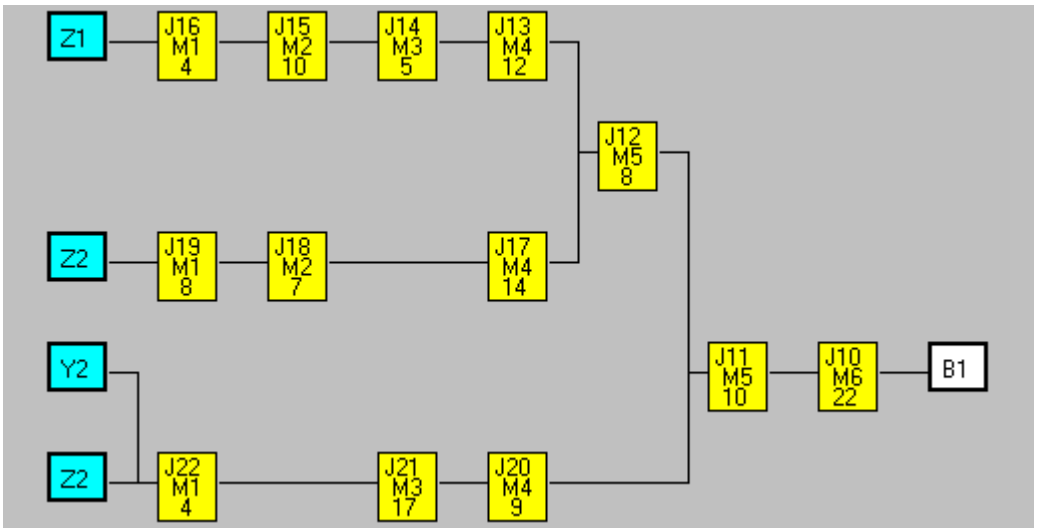

Figure A.9 Combined BOM and routing for product B1.

Operation J12 is a subassembly of two parts. J12 (which also serves as the catalogue number of the part) is later assembled by operation J11 with the J20 part.

All assemblies in this simple environment are made with a 1:1 ratio. It is that simple!

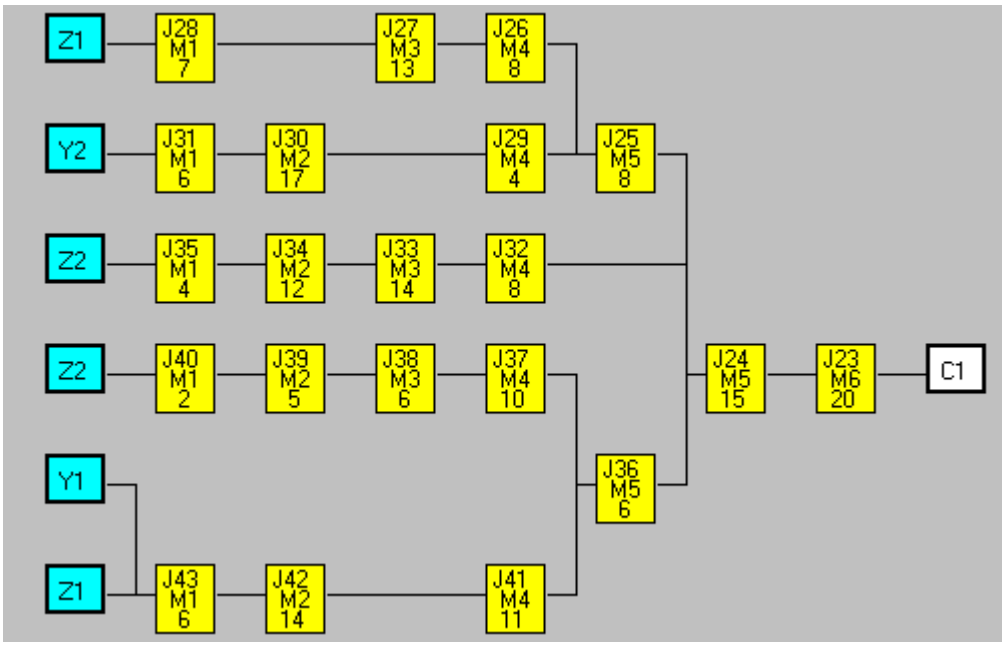

Figure A.10 Combined BOM and routing for product C1.

C1 is certainly the most complicated product. Two subassemblies are finally assembled, with yet another part (J32) at the J24 final assembly operation.
How does the material requirements planning (MRP) module operate?

Every week, on Monday morning, the MRP generates new work orders based on the new market requirements that were received. Work orders are generated, in this variation of the MRP algorithm, for every end product. The work order includes all the materials, quantities, operations and resources. As no common parts exist in this specific environment, there is no need for generating work order per part in the BOM.

Raw materials are released based upon a backward scheduling from the order due date. The work order due date is the earliest due date of the individual customer orders included in it. Each production step (which may be perceived also as a BOM level) is assigned 4 working days as a lead-time. Therefore the release is determined as 4* (number of operations) working days prior to the order due date.

For instance, take the C1 chart. Material Z2 is supposed to enter the J40 operation. The sequence of the operations on that material is: J40, J39, J38, J37, J36 (the subassembly), J24 (final assembly) and J23. All in all there are seven operations; each needs 4 working days to ensure completion. That means Z2 is needed 28 working days prior to shipment. In case the work order is planned too late (less than 28 days until shipping), the Z2 materials are released immediately. Right now the company quotes 30 working days for delivery. However, the planning is done once a week — in some cases only 25 days are available until the delivery date. In this case we need to hope that some of the seven operations will take less than 4 days to process the work order.

The MRP policy with the 4 days lead-time between subsequent operations is just one option. The basic options are shown in the Production View under the Policies menu (at the top). Click on the Policies and then on Raw Material Release:

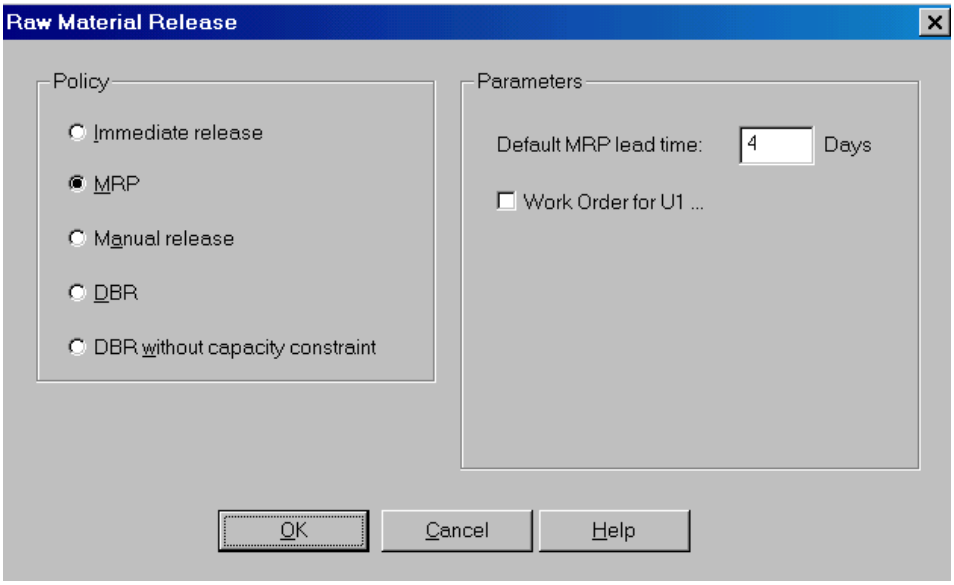

Figure A.11 Material Release policies.

The Immediate Release option is simply releasing the materials immediately when there is a need for a new work order. We recommend you skip the 'Manual release' option. The full Drum-Buffer-Rope (DBR) option is explained and demonstrated in the "DBR-winning-approach" document.

The minimum batch, as currently dictated, is for 60 pieces. The minimum batch is dictated for all three products. Surely this is a little bit primitive ERP, but since the company is so small, this should not be an obstacle to good overall performance.
The minimum batch and the frequency of running the MRP planning (currently every Monday morning) appears in the Work Order Policy entry within the Policies of the Production View:

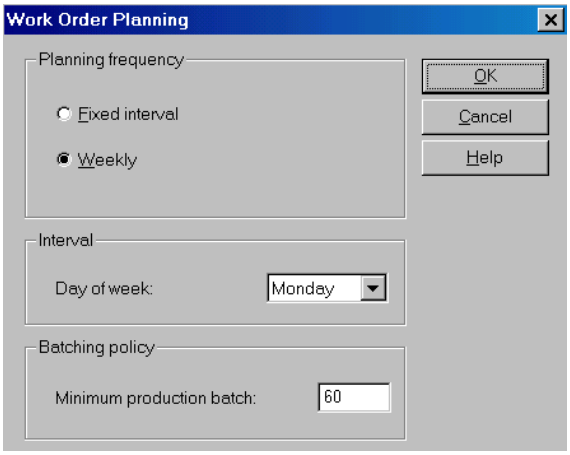

Figure A.12 Work Order Planning policies.

Once the work order is released to the floor, it is up to the individual work centers to process it according to their own priorities. Some management policies are implemented to ensure adequate priorities.
A dispatch policy called save setups instructs the operator to save setups as possible. That means that if M4 has just finished to process the J20, it will look whether another work order that needs operation J20 is available. This policy encourages merging work orders when applicable.
Another policy tries to prevent working on work-orders that are still at work at previous operations. This is the Complete WO (work order) policy that ensures that only when all the parts are available is the work center allowed to work on that order.

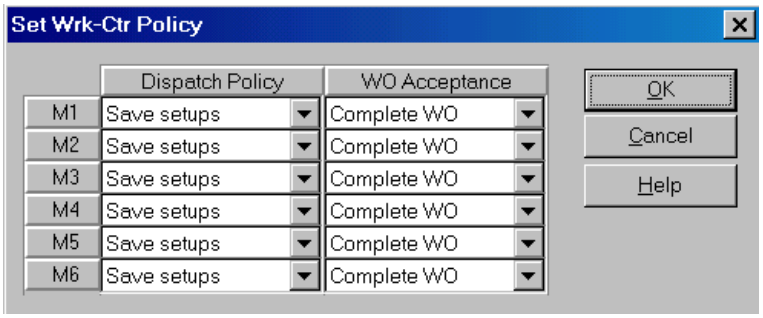

Figure A.13 Set Work-Center policy

Achieving good efficiencies is considered to be very important. This is quite a problematic issue in this particular environment. Take a glance at the actual utilization level of the work centers (Figure A.14). Here is the report for the last 2 months:

Wrk-Ctr Utilization

	December				November			
	Prod.	Setup	Break	Idle	Prod.	Setup	Break	Idle
M1	35.6%	4.0%	2.5%	58.0%	51.3%	5.2%	3.2%	40.3%
M2	36.7%	1.4%	4.4%	57.6%	66.6%	1.5%	3.3%	28.6%
M3	44.7%	2.4%	5.2%	47.8%	57.9%	2.8%	2.0%	37.2%
M4	70.3%	2.7%	10.4%	16.6%	60.5%	2.6%	2.3%	34.6%
M5	68.0%	0.0%	4.8%	27.2%	30.7%	0.0%	1.7%	67.5%
M6	68.6%	1.8%	7.8%	21.8%	38.7%	0.5%	8.2%	52.6%

Figure A.14 Utilization level of the work centers for last 2 months.

This information screen is based on the actual usage of the machines (work centers) during the last two months. The worrying fact is the huge amount of idle time throughout the shop floor. Before you evaluate ways to reduce setup time (sorry, in the simulation you can do nothing to reduce the downtime) you would think how to avoid so much idle time.
By the way, we are lucky here. In the virtual company the depth of the problem is revealed. In so many shop-floors people do their best to hide the true amount of idle-time (excess capacity).

The open work orders are shown in the Master Production Schedule entry in the Information menu. Here is the current open work order list:

Master Production Schedule

Prod.	Qty.	Left	Received	Due Date	WO
A1	15	5	12/12/01	01/22/02	W83
A1	17	17	12/13/01	01/23/02	W83
A1	17	17	12/14/01	01/24/02	W83
A1	12	12	12/17/01	01/25/02	W83
A1	12	12	12/18/01	01/28/02	W84
A1	12	12	12/19/01	01/29/02	W84
A1	12	12	12/21/01	01/31/02	W84
A1	26	26	12/24/01	02/01/02	W84
A1	7	7	12/25/01	02/04/02	W85
A1	4	4	12/26/01	02/05/02	W85
A1	13	13	12/27/01	02/06/02	W85
A1	10	10	12/28/01	02/07/02	W85
A1	4	4	12/31/01	02/08/02	W85
A1	22	22	12/31/01	02/08/02	W85

Sort By
- Time
- WO
- Product
- Due Date

Show WO

Help

Close

Figure A.15 Master Production Schedule screen.

As a matter of fact we have only three open work orders in the shop. Work order 83 has 4 requests; each was generated in another day within one week. The earliest due date is January 22 and this is the official due date for the whole work order.

If you mark one of the lines of a work order and then click on the Show WO button you get the exact state of the WO. You can do it also through the entry Work order status. Here is the current state of WO 84:

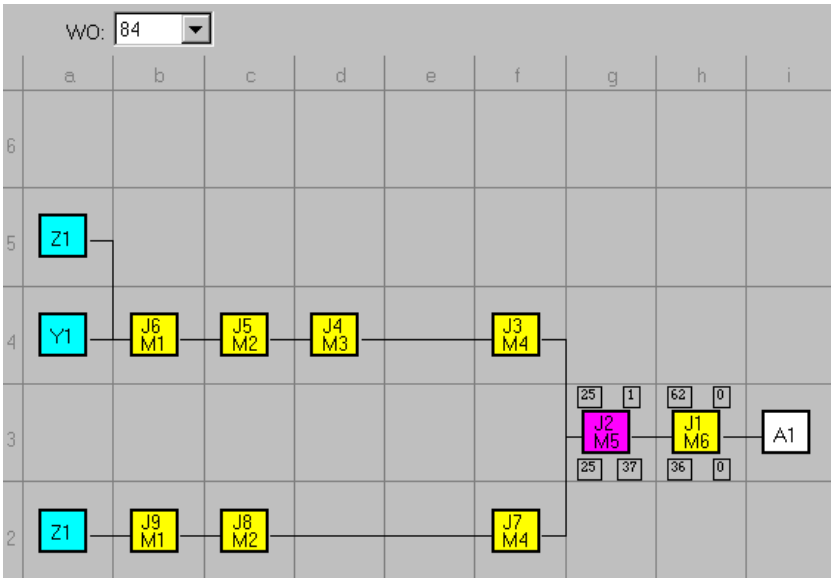

Figure A.16 WO 84 — the current state.

The operations that are not surrounded by numbers have been completed. The assembly operation, J2, done by M5, is now at work as is signaled by the color of the J2 box. The top left number (25) means there are 25 more parts to process for this work order. The left bottom number (also 25) means there are enough materials for 25 parts at the site of M5. The bottom right number (37) is the number of parts that were already processed by M5 for work order 85. The top right is the number of parts completed but not yet transferred to the next operation.
The J1 operation tells us:

- M6 does not work on work order 85.
- It has to process 62 parts.
- It already has the materials for 36 parts.
- It did not process any part yet.

In the Actions menu (click on the Actions menu and then on Add Extra Shift) it is important to tell you about the option to add a second shift (Add Extra Shift) and how much it costs:

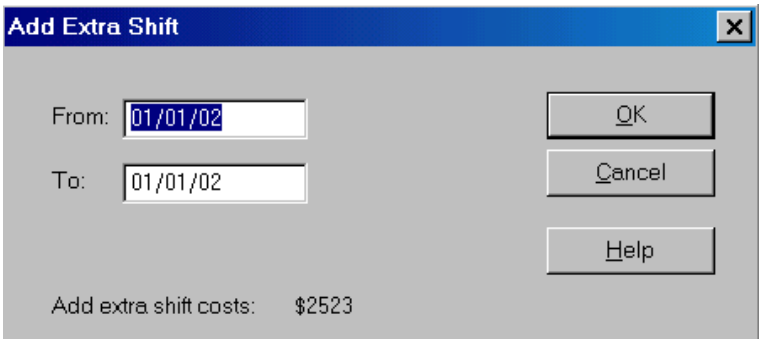

Figure A.17 Adding second shifts — an option in the Actions menu of the Production View.

In order to know more about the other entries in the Information, Actions, and Policies menu, you should go through the tutorial to know more or simply try.

Let us move to the Purchasing View (click on the Purchasing button). In this scenario, the task of purchasing is especially simple. There are only four items to look for. These are displayed in the main screen of the purchasing.

Materials

Figure A.18 The purchasing screen.

The Stock field contains the number of units in the stockroom. On order shows how many units have been purchased but did not arrive yet.

How does the MRP module function in the Purchasing department? Funny enough the former management of this company has decided not to use it. Instead they use the old algorithm of order-point, which is called here Purchase-to-Stock.

You can activate the MRP module in the Purchasing through the Policies menu. We still recommend that you first run the simulation under the Purchase-to-Stock policy, but feel free to change the inventory levels.

Under the general Purchase-to-Stock, the entry in the Policies menu of the Purchasing View, the inventory levels are defined:

Edit Material Parameters

	Max Level	Order Level	Red Line Level
Z1	1200	800	100
Z2	800	400	100
Y1	1000	500	100
Y2	800	400	100

Figure A.19 Current purchasing policy.

The order level is the order point. When the stock drops below the order level, an automatic purchasing order is issued to the default supplier to complement the stock to the max level. The red line level is a warning mechanism that colors the item ID in red when the stock is below that level.

It is certainly important to know what kind of suppliers the company works with. Here is some information about the suppliers:

Suppliers

	Name	S.C	QLT	Z1	Z2	Y1	Y2
1	Reg	500	22	(C) 100	(C) 150	(C) 60	(C) 50
2	Fast	650	3	115	175	72	58

Figure A.20 The competing suppliers

The supplier (called Reg) promises to deliver any purchasing order in 22 working days, which is equivalent to 1 month. The S.C. column means fixed shipping costs. That means that any order causes this amount of expenses, no matter the size of the order. Then, every item cost as specified. The Fast supplier is much faster, but is also more expensive.

The default supplier is called Reg. Any automatic purchasing order, when the on-hand quantity plus any open purchasing order is below the order level, goes to Reg. If you wish to change suppliers you have to click on the appropriate entry in the supplier's table – which product and which supplier. The default is denoted by the (C) sign at the table (see Figure A.20).

At any time you can buy more materials from any supplier. You do it through the Actions menu by selecting the Order entry. All you need to specify is the material, the quantity, and the supplier.

In order to check the validity of the inventory levels you would like to see some past consumption information. In the Information menu you will find the entry called Consumption summary), which is shown below:

Consumption Summary

	Cost per Unit	Avg. Consumption per Month	Avg. Cost per Month
Z1	101.48($)	599(Un.)	60787($)
Z2	151.52($)	250(Un.)	37880($)
Y1	60.92($)	249(Un.)	15170($)
Y2	50.94($)	125(Un.)	6368($)

Figure A.21 Consumption summary information.

The first column states the current cost per unit that includes shipping costs and possible purchase from the Fast supplier. The second column displays the average monthly consumption, meaning the quantity that went into the shop floor, for the past 6 months. The third is simply the multiplication of the average consumption with the cost per unit to get the estimated purchasing costs per month of that material.

We have started the tour with the profit and loss statement. We will now glance at important information that is provided by the Finance View. These are the analyses of the product costs. The allocation was done based on the standard of having 70% of the available time of every machine dedicated to actual processing. The allocation was then done according to the net processing time for each product.

Product Cost Analysis - A1

A1
B1
C1

Sale price:	$500.00
Standard cost:	
Standard material consumption	$263.89
Direct labor:	$38.89
Indirect cost:	$192.87
	$495.65
Profit per product unit:	$4.35
Marginal profit percentage:	0.87

Product Cost Analysis - B1

A1
B1
C1

Sale price:	$1000.00
Standard cost:	
Standard material consumption	$455.47
Direct labor:	$67.42
Indirect cost:	$334.30
	$857.19
Profit per product unit:	$142.81
Marginal profit percentage:	14.28

Product Cost Analysis - C1

A1
B1
C1

Sale price:	$1500.00
Standard cost:	
Standard material consumption	$617.87
Direct labor:	$101.64
Indirect cost:	$504.03
	$1223.54
Profit per product unit:	$276.46
Marginal profit percentage:	18.43

Figure A.22 The cost analysis for the three products.

Smart Industries Inc. has also one contract with a large client for monthly delivery. You will find this analysis at the Finance View.

We almost have finished the tour. Not all the information and the policies were covered in this tour, but it should give you a good idea. The one thing that is still left is how to run the simulation — let time proceed, orders to come in and let material and money to move. In order to run you click on the run dialog box, then face the following screen:

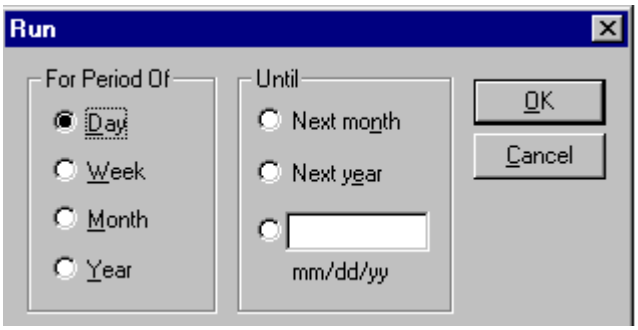

Figure A.23 The Run window.

You can choose to run day be day, or until next month. You can even dictate a specific date. Running longer than one month in one time is not recommended. Anyway, you can stop the run by clicking on the stop dialog box.

Well, the tour is over. We have concentrated on the important managerial issues. We recommend you go through the computerized tutorial within the simulator. Open the Sessions menu and click on Tutorial. After that the next step is to go through the two automatic guided runs in the Sessions menu. Then you'll be equipped to run the simulator yourself and then maybe you'll with to know how we would have truly run it. The file, A-Winning-Case-Analysis, contains a detailed run with the decisions and the actual implementation of those decisions. Used the DBR-Winning-Approach file to go through another approach.

Good luck! Please remember that you can make this company successful, even with no luck.