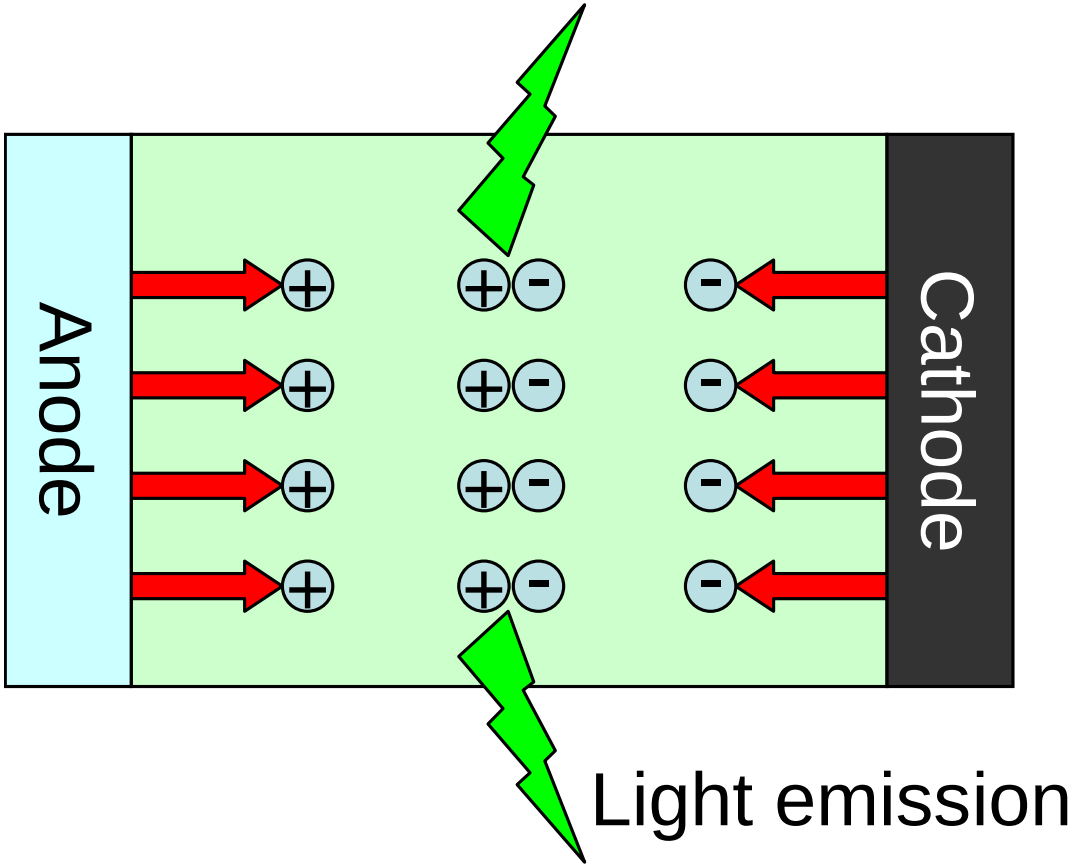

Figure 12.1 Operation of an organic light emitting diode.

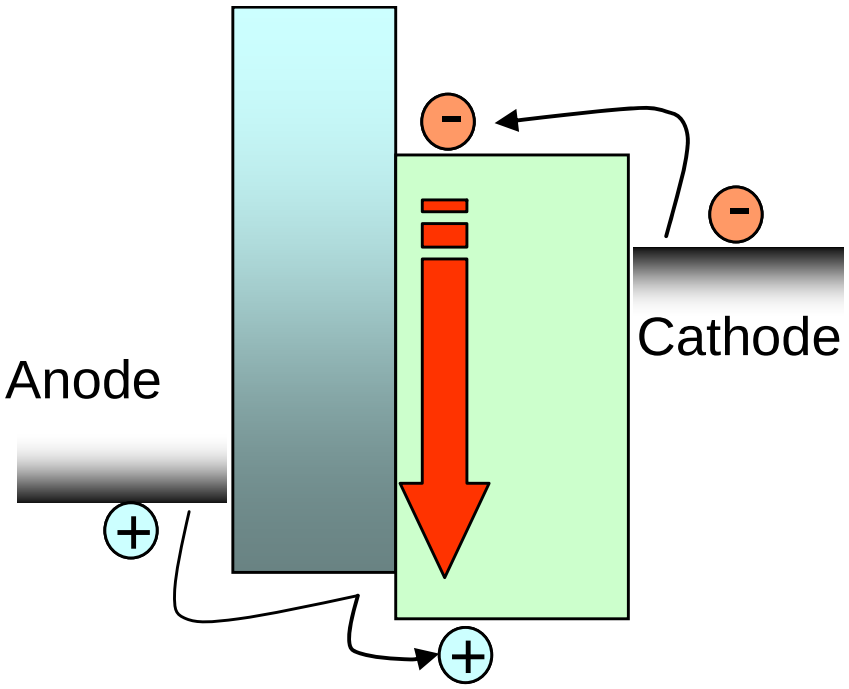

Figure 12.2 Double-layer OLED.

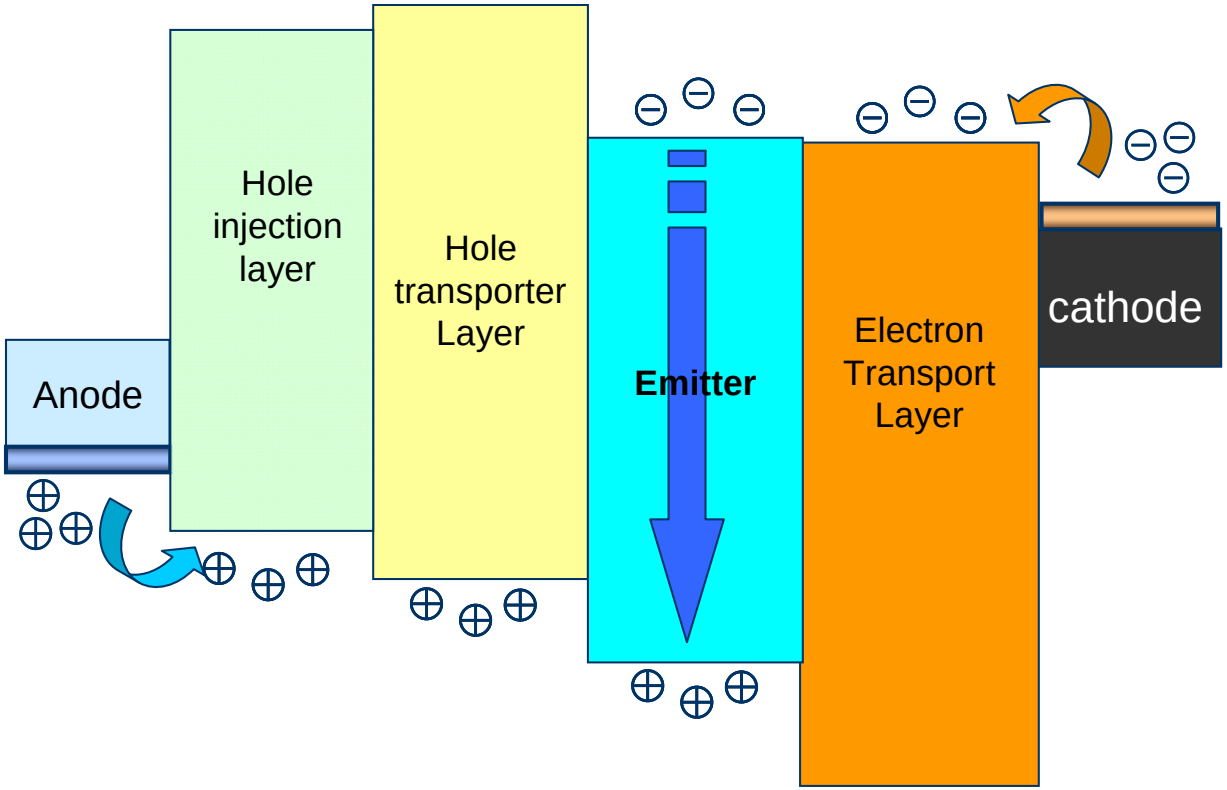

Figure 12.3 Multi-layer OLED device structure.

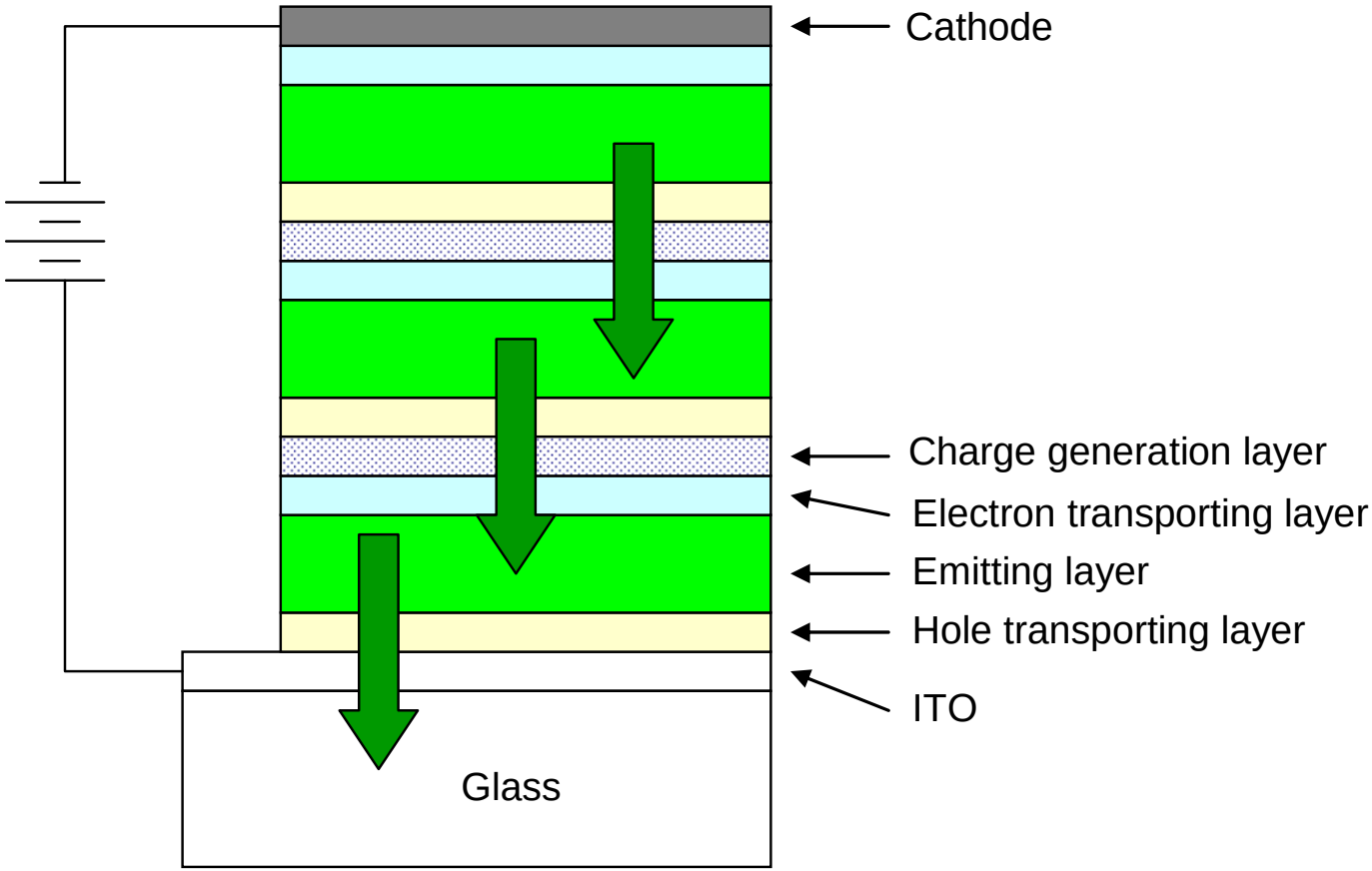

Figure 12.4 A three-cell stack OLED.

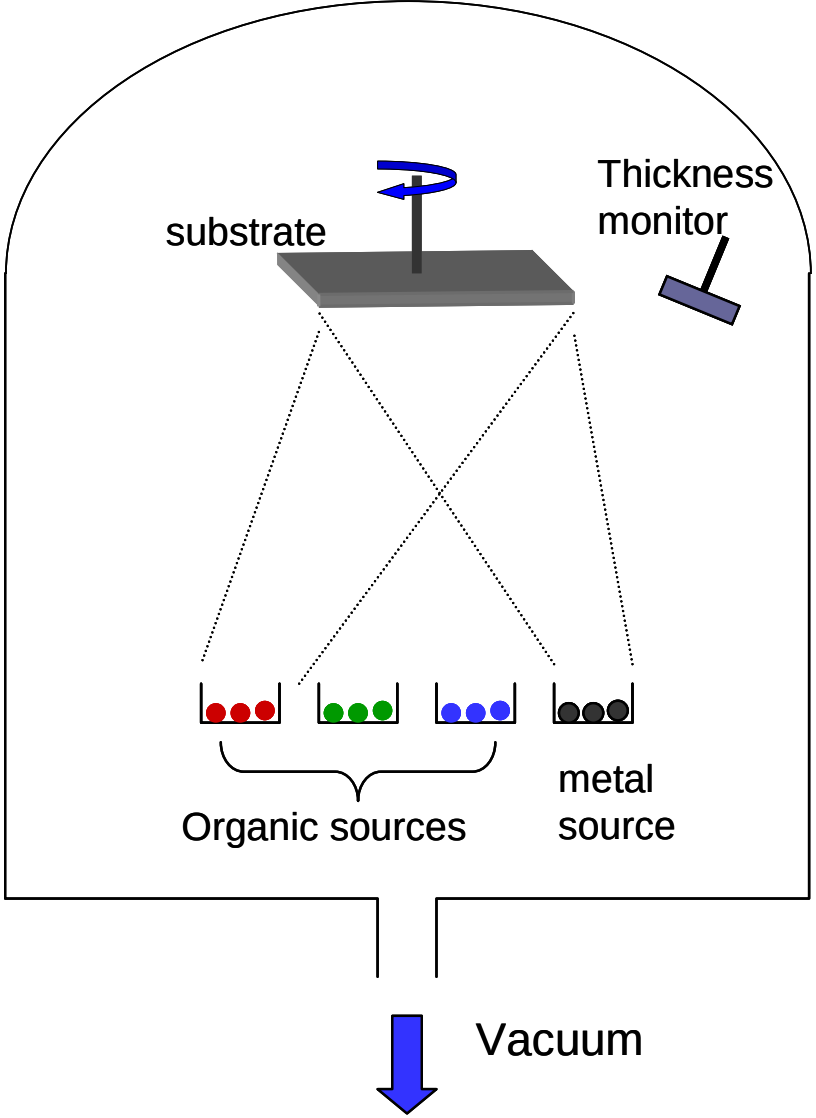

Figure 12.5 Multi-source evaporator for OLED fabrication.