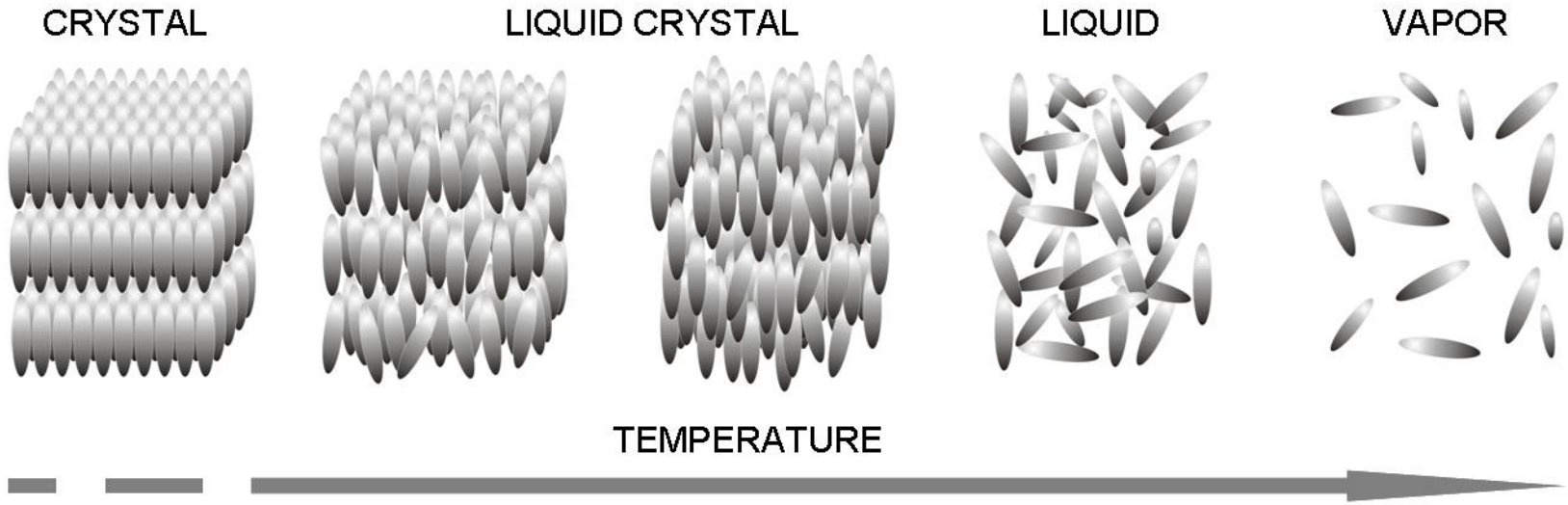

FIGURE 25.1 Schematic arrangement of the molecules in different phases.

Introduction to Organic Electronic and Optoelectronic Materials and Devices (Eds. Sun and Dalton) CRC Press, 2008. ISBN-10: 0849392845

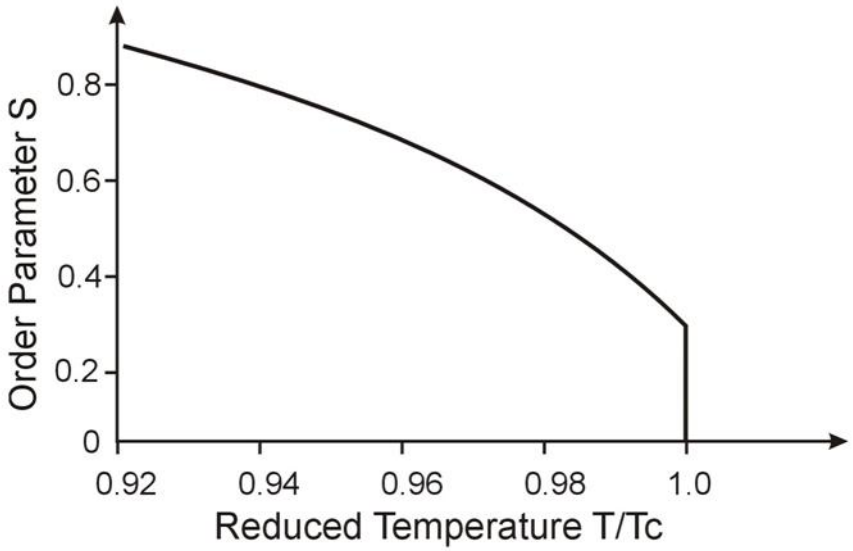

FIGURE 25.2 Temperature-dependent order parameter of the liquid crystal (LC) phase.

Introduction to Organic Electronic and Optoelectronic Materials and Devices (Eds. Sun and Dalton) CRC Press, 2008. ISBN-10: 0849392845

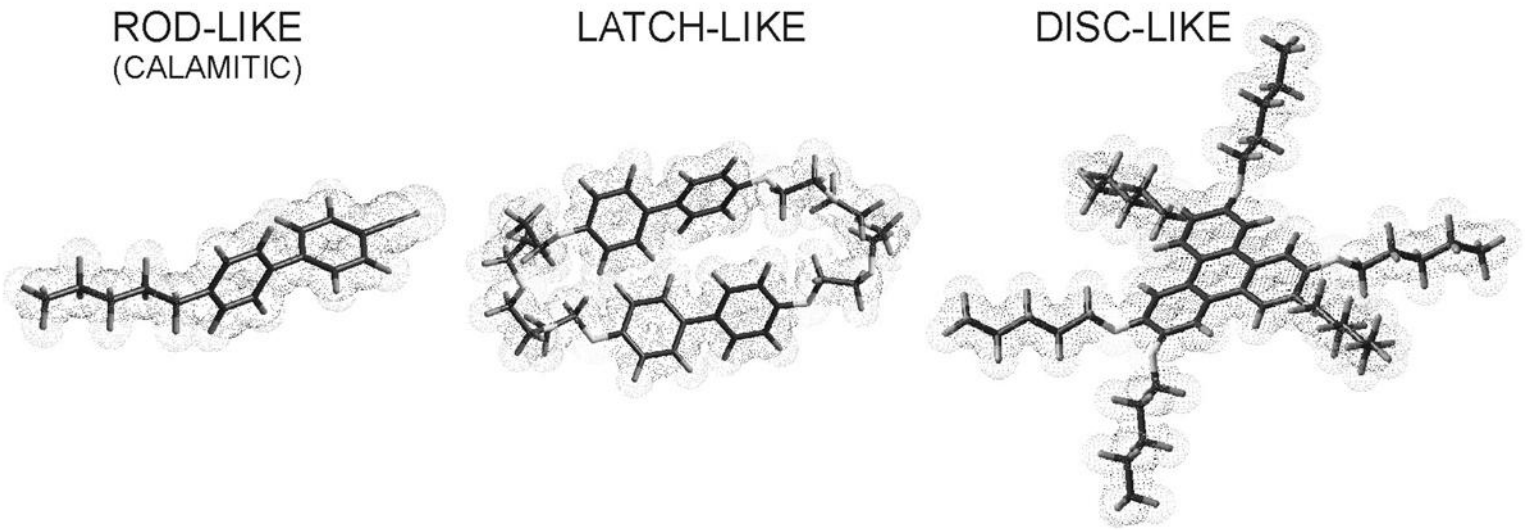

FIGURE 25.3 Molecular geometry of different types of liquid crystal (LC).

Introduction to Organic Electronic and Optoelectronic Materials and Devices (Eds. Sun and Dalton) CRC Press, 2008. ISBN-10: 0849392845

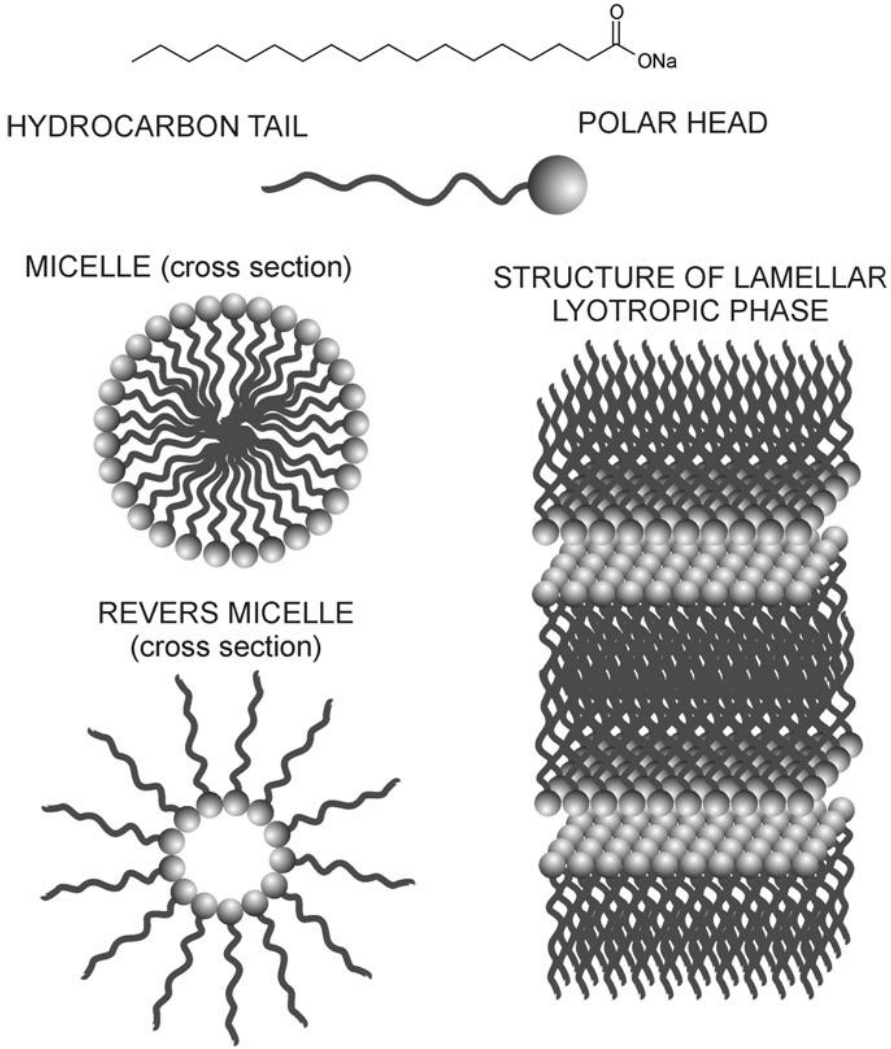

FIGURE 25.4 Examples of the lyotropic liquid crystals (LCs).

Introduction to Organic Electronic and Optoelectronic Materials and Devices (Eds. Sun and Dalton) *CRC Press, 2008. ISBN-10: 0849392845*

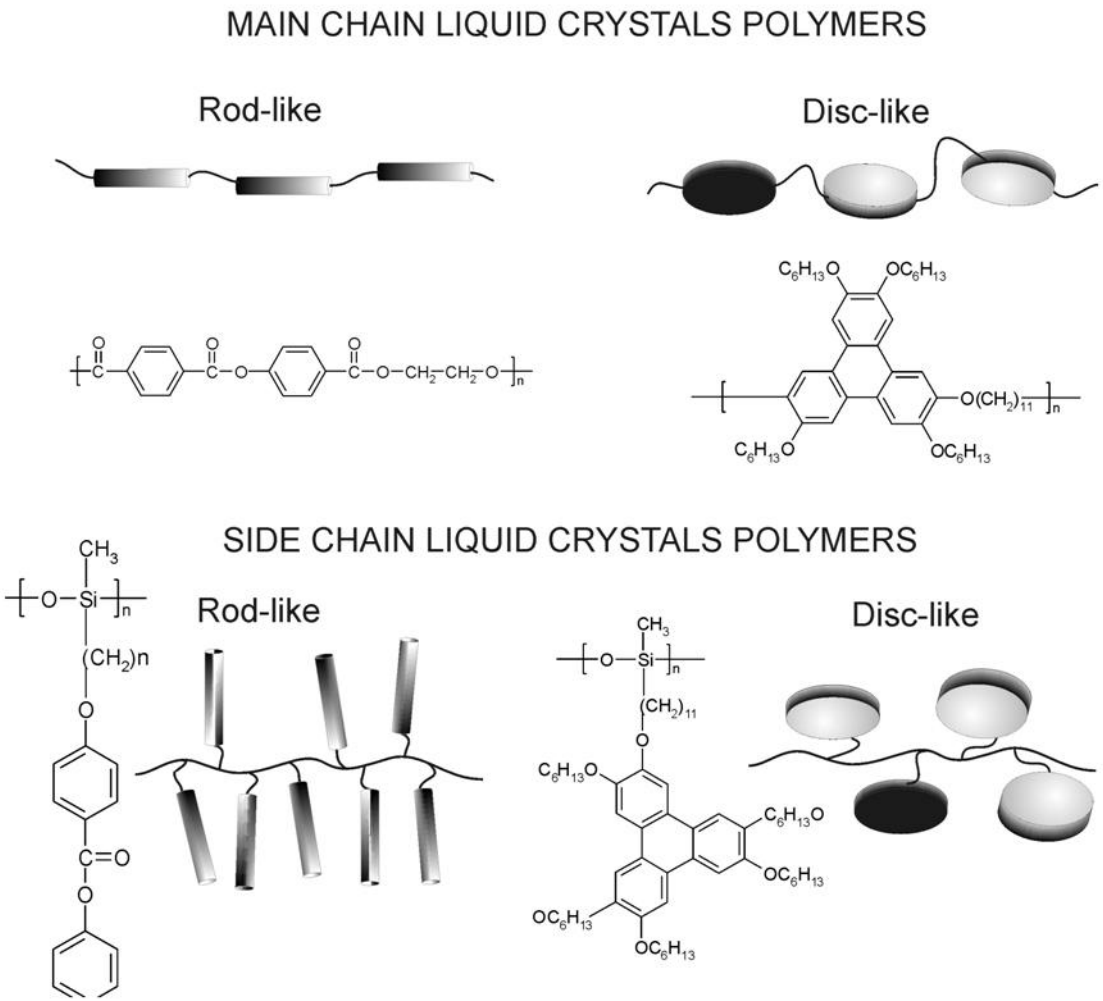

FIGURE 25.5 Types of liquid crystal (LC) polymeric material.

Introduction to Organic Electronic and Optoelectronic Materials and Devices (Eds. Sun and Dalton) CRC Press, 2008. ISBN-10: 0849392845

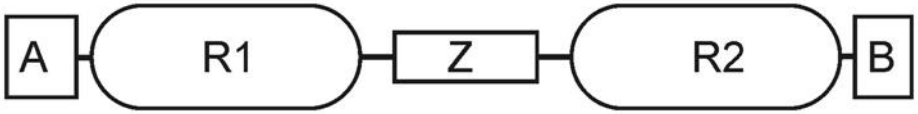

FIGURE 25.6 Building blocks of calamitic liquid crystals (LCs). A-R1-Z-R2-B.

Introduction to Organic Electronic and Optoelectronic Materials and Devices (Eds. Sun and Dalton) CRC Press, 2008. ISBN-10: 0849392845

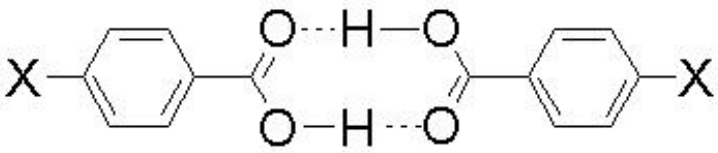

FIGURE 25.7 Dimeric structure formed by 4-alkyl-benzoic acid.

Introduction to Organic Electronic and Optoelectronic Materials and Devices (Eds. Sun and Dalton) CRC Press, 2008. ISBN-10: 0849392845

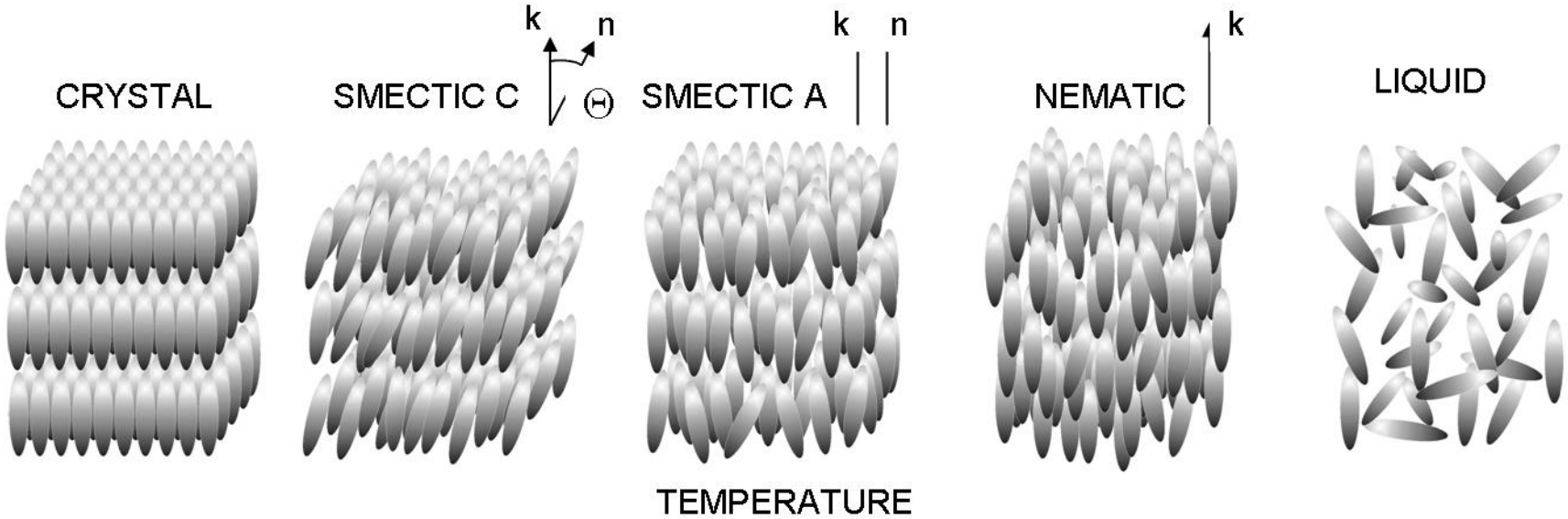

FIGURE 25.8 Schematic arrangement of the molecules in basic nematic and smectic phases.

Introduction to Organic Electronic and Optoelectronic Materials and Devices (Eds. Sun and Dalton) CRC Press, 2008. ISBN-10: 0849392845

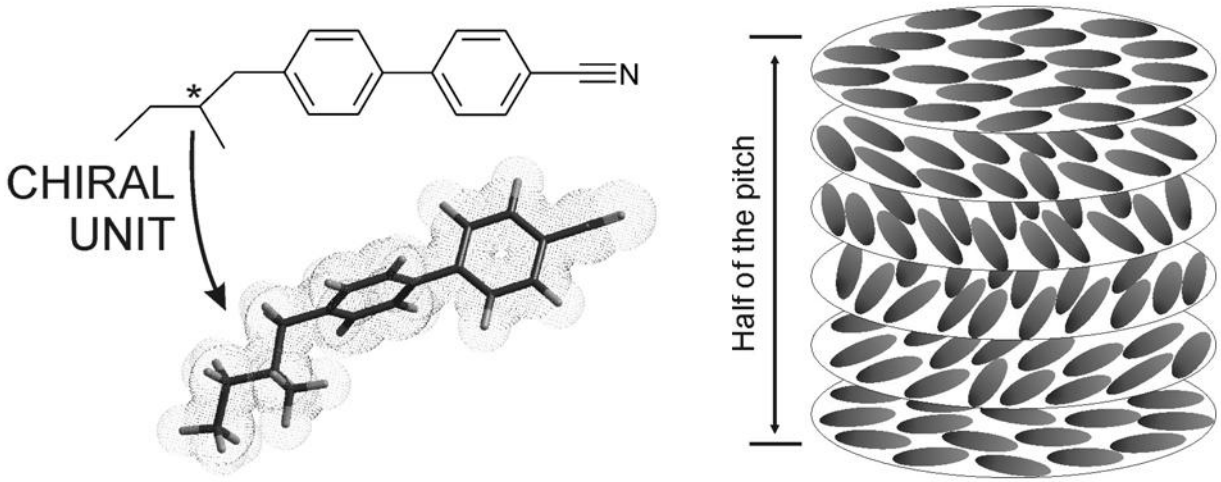

FIGURE 25.9 Chirality of the calamitic molecule and chiral nematic structure.

Introduction to Organic Electronic and Optoelectronic Materials and Devices (Eds. Sun and Dalton) CRC Press, 2008. ISBN-10: 0849392845

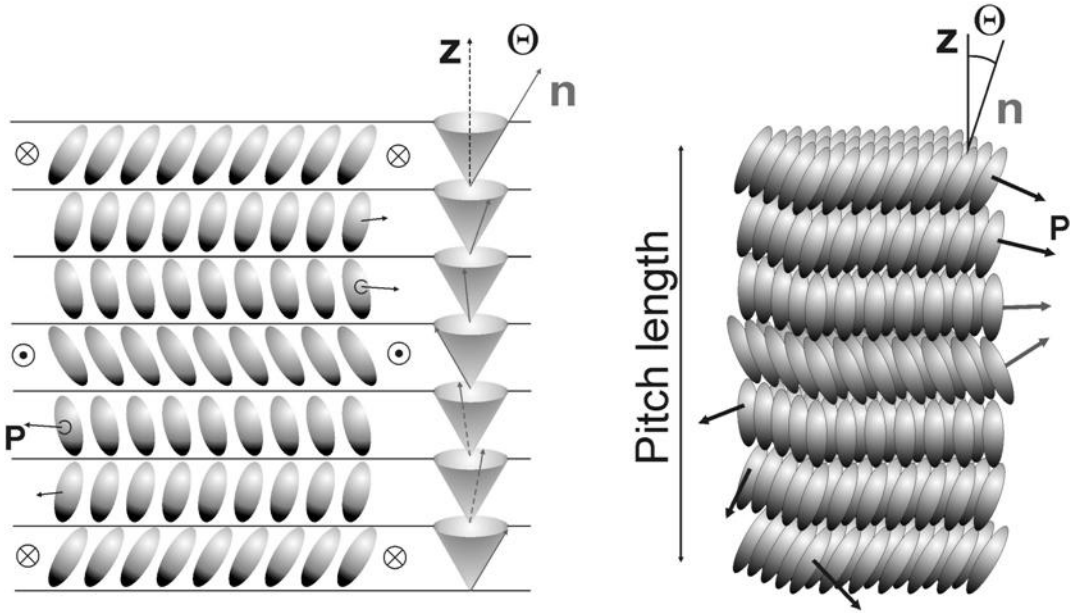

FIGURE 25.10 Structure of the ferroelectric smectic C* phase.

Introduction to Organic Electronic and Optoelectronic Materials and Devices (Eds. Sun and Dalton) CRC Press, 2008. ISBN-10: 0849392845

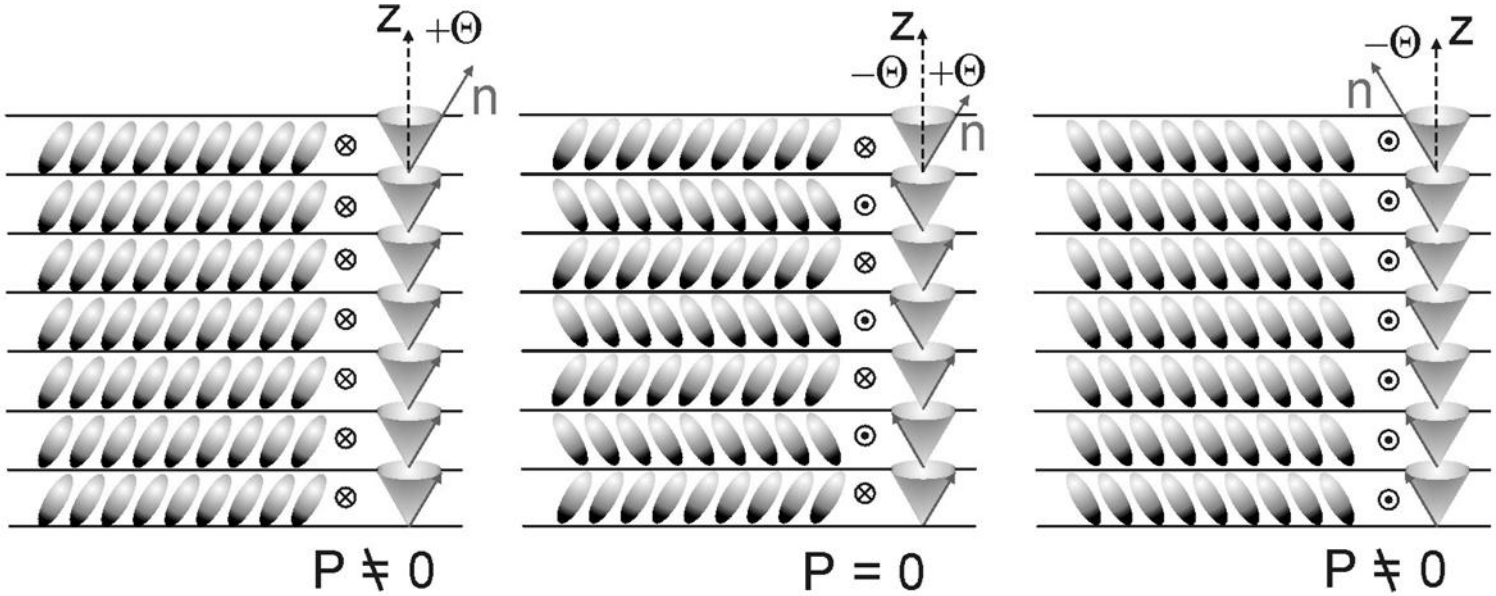

FIGURE 25.11 smectic C* Structure of the antiferroelectric phase.

Introduction to Organic Electronic and Optoelectronic Materials and Devices (Eds. Sun and Dalton) CRC Press, 2008. ISBN-10: 0849392845

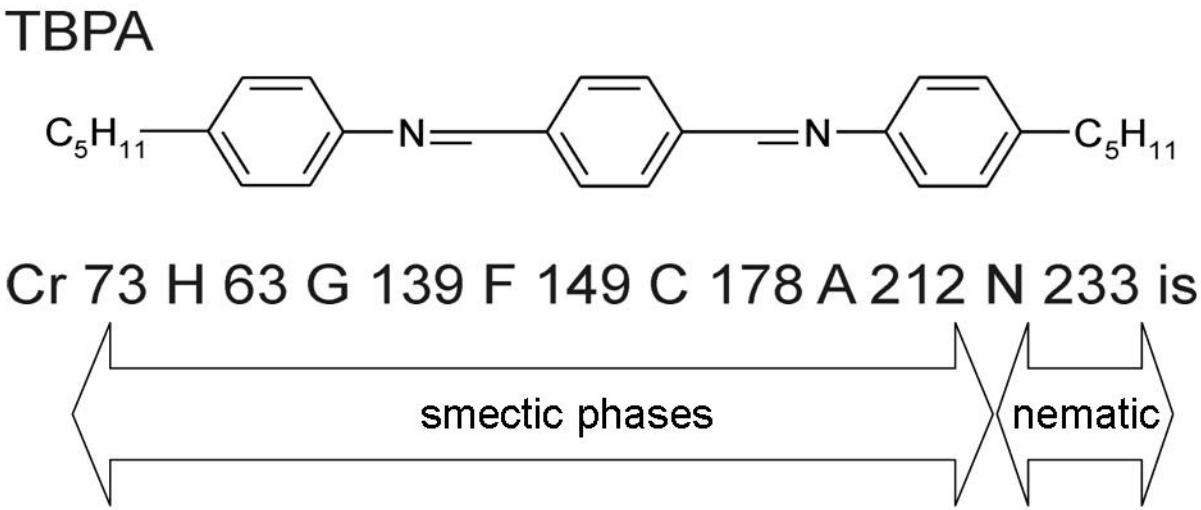

FIGURE 25.12 Molecular structure and mesomorphic properties of the terephthalylidene-bis-p-n-pentylaniline (TBPA).

Introduction to Organic Electronic and Optoelectronic Materials and Devices (Eds. Sun and Dalton) CRC Press, 2008. ISBN-10: 0849392845

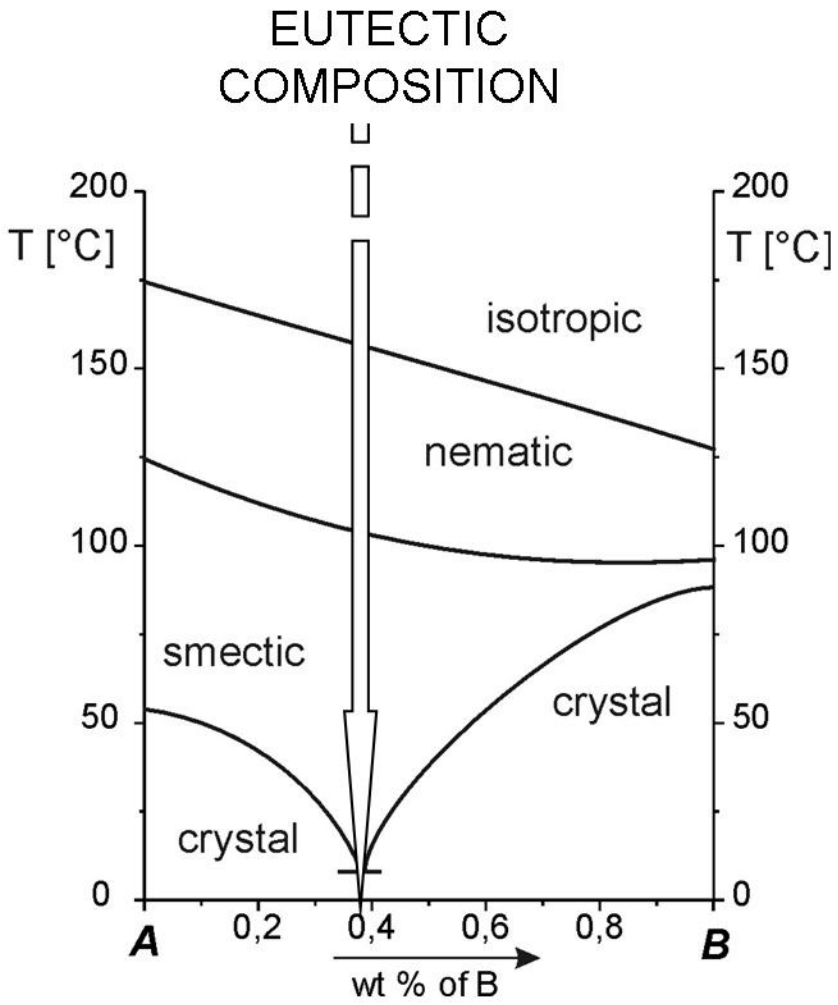

FIGURE 25.13 Simple phase diagram of the binary liquid crystal (LC) mixture.

Introduction to Organic Electronic and Optoelectronic Materials and Devices (Eds. Sun and Dalton) CRC Press, 2008. ISBN-10: 0849392845

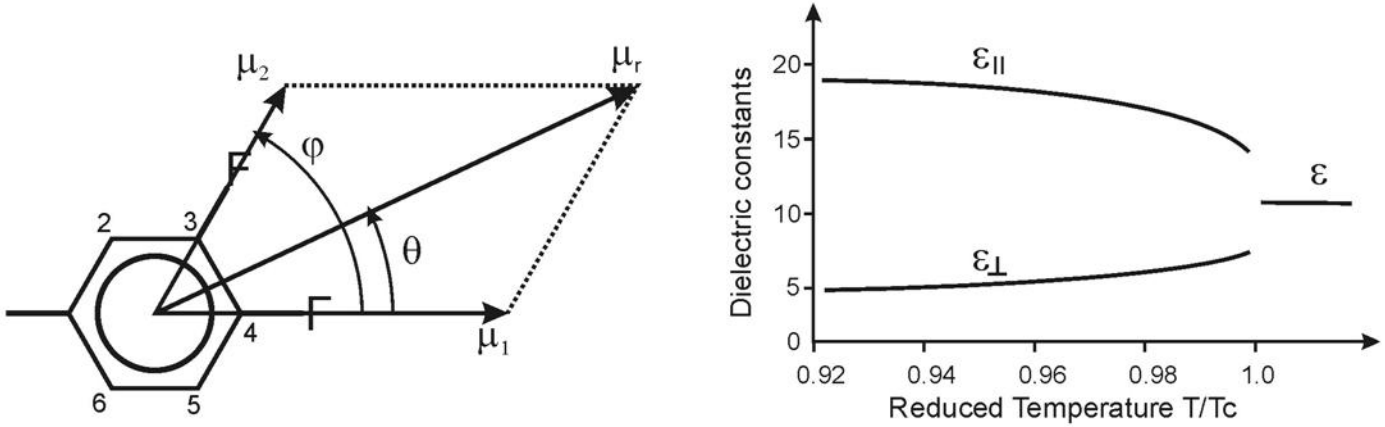

FIGURE 25.14 Dipole moment of the simple mesogenic structure.

Introduction to Organic Electronic and Optoelectronic Materials and Devices (Eds. Sun and Dalton) CRC Press, 2008. ISBN-10: 0849392845

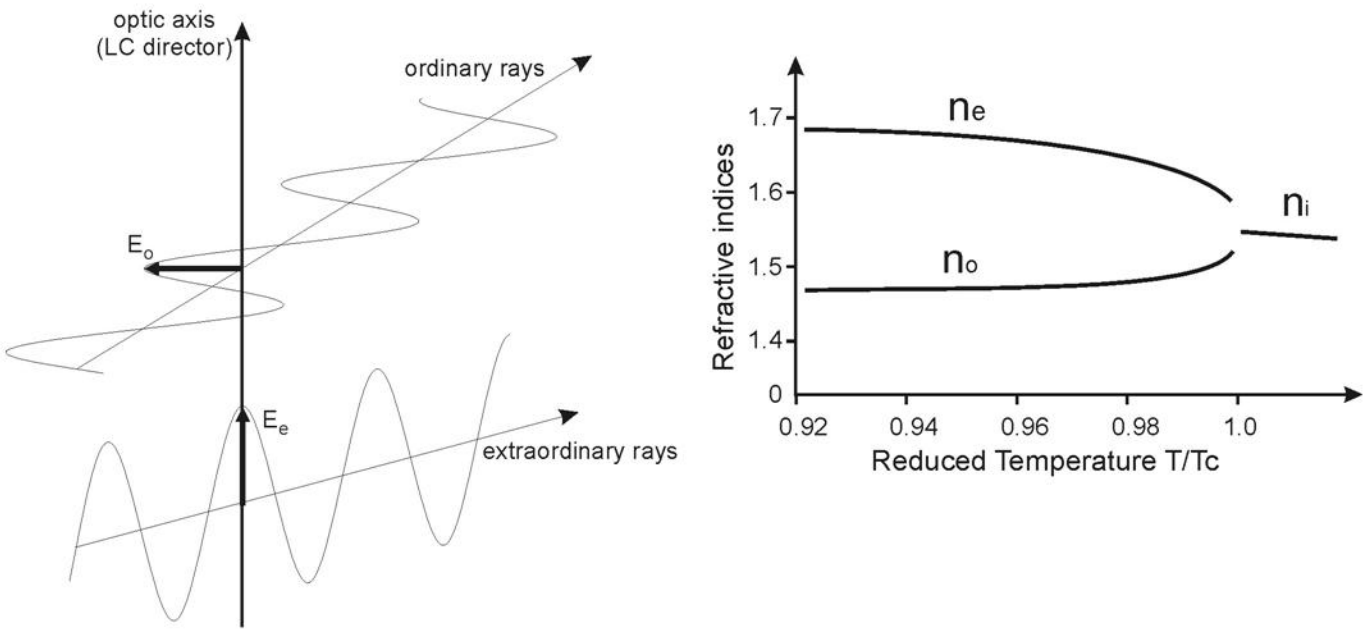

FIGURE 25.15 Refractive indices of a uniaxial nematic.

Introduction to Organic Electronic and Optoelectronic Materials and Devices (Eds. Sun and Dalton) *CRC Press, 2008. ISBN-10: 0849392845*

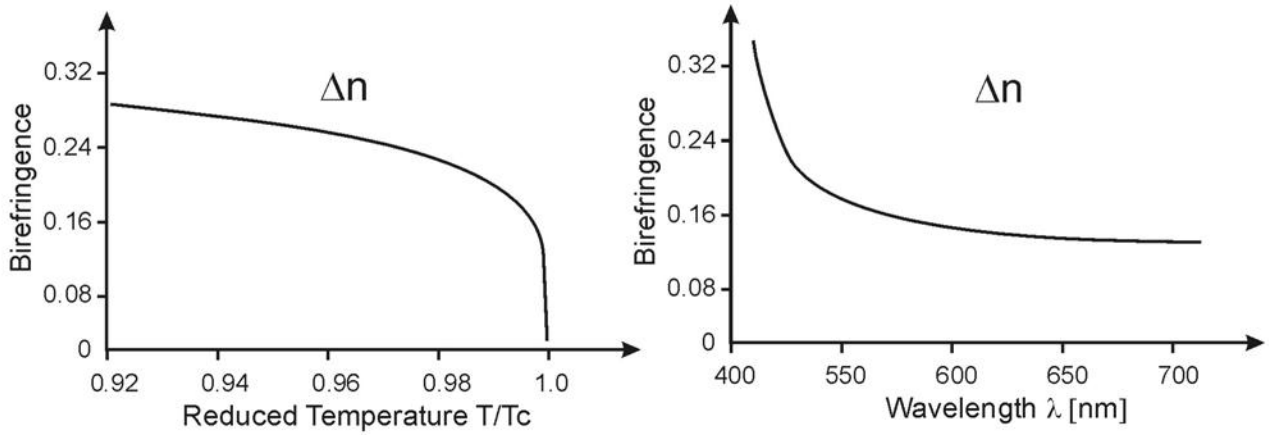

FIGURE 25.16 Temperature and wavelength dependent birefringence of nematic liquid crystal (LC).

Introduction to Organic Electronic and Optoelectronic Materials and Devices (Eds. Sun and Dalton) CRC Press, 2008. ISBN-10: 0849392845

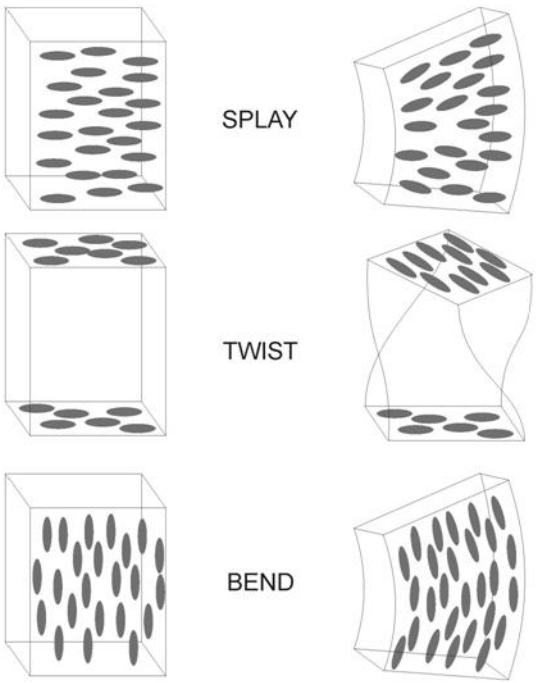

FIGURE 25.17 Elastic constants of the liquid crystals.

Introduction to Organic Electronic and Optoelectronic Materials and Devices (Eds. Sun and Dalton) *CRC Press, 2008. ISBN-10: 0849392845*

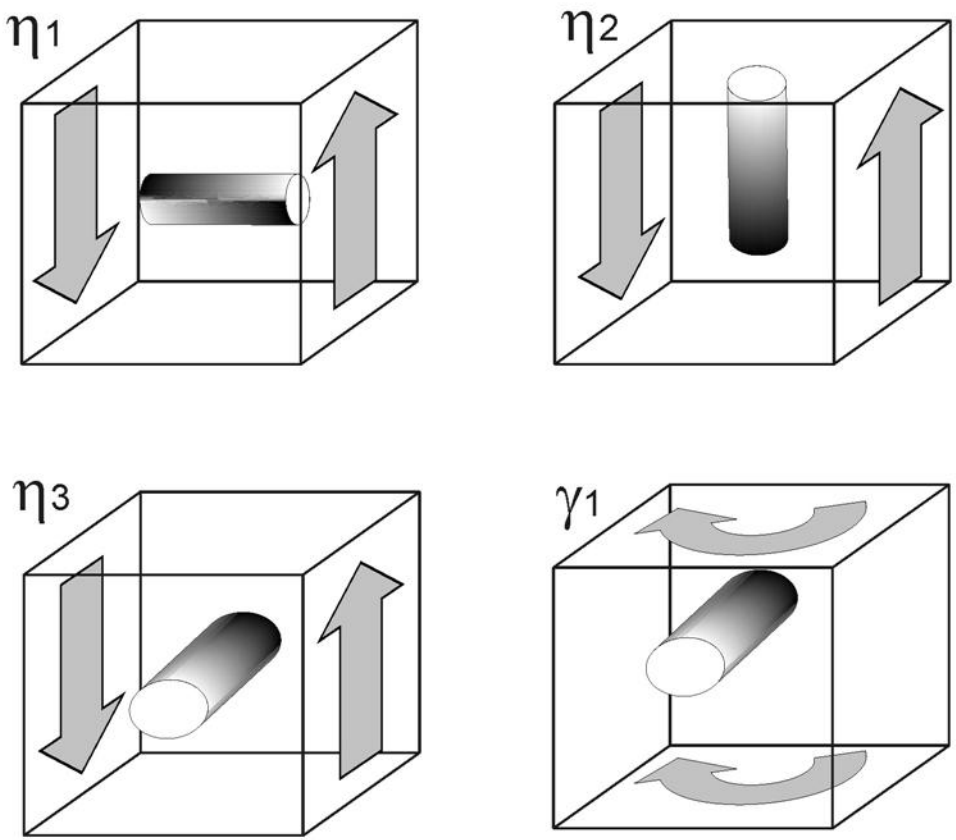

FIGURE 25.18 Anisotropic viscosity coeffi cients required to characterize a nematic.

Introduction to Organic Electronic and Optoelectronic Materials and Devices (Eds. Sun and Dalton) CRC Press, 2008. ISBN-10: 0849392845

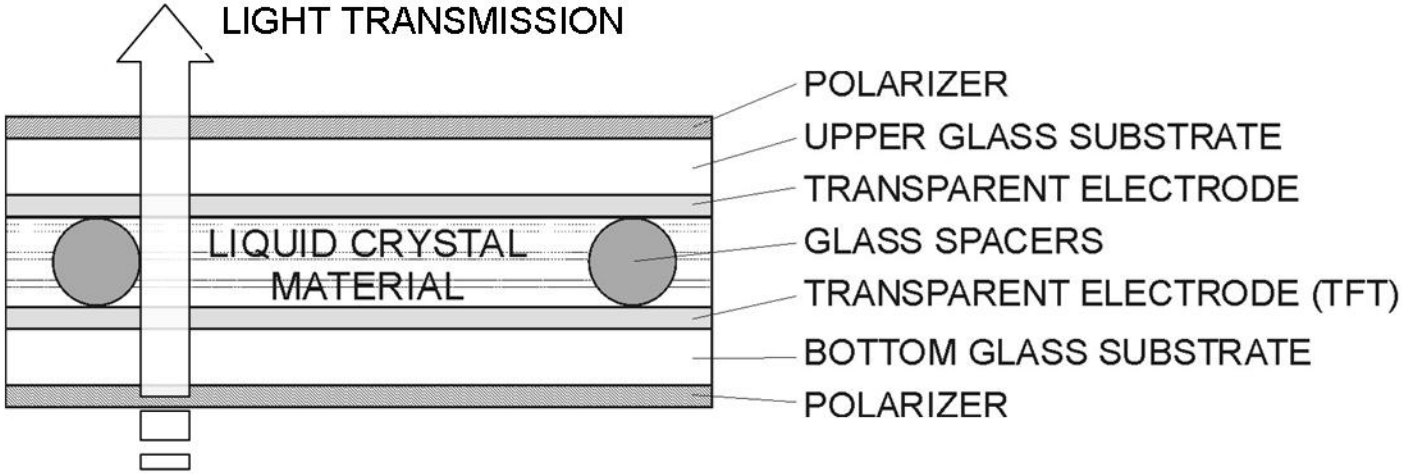

FIGURE 25.19 Schematic view of liquid crystal (LC) electro-optical cell, the basic unit of liquid crystal display (LCD).

Introduction to Organic Electronic and Optoelectronic Materials and Devices (Eds. Sun and Dalton) CRC Press, 2008. ISBN-10: 0849392845

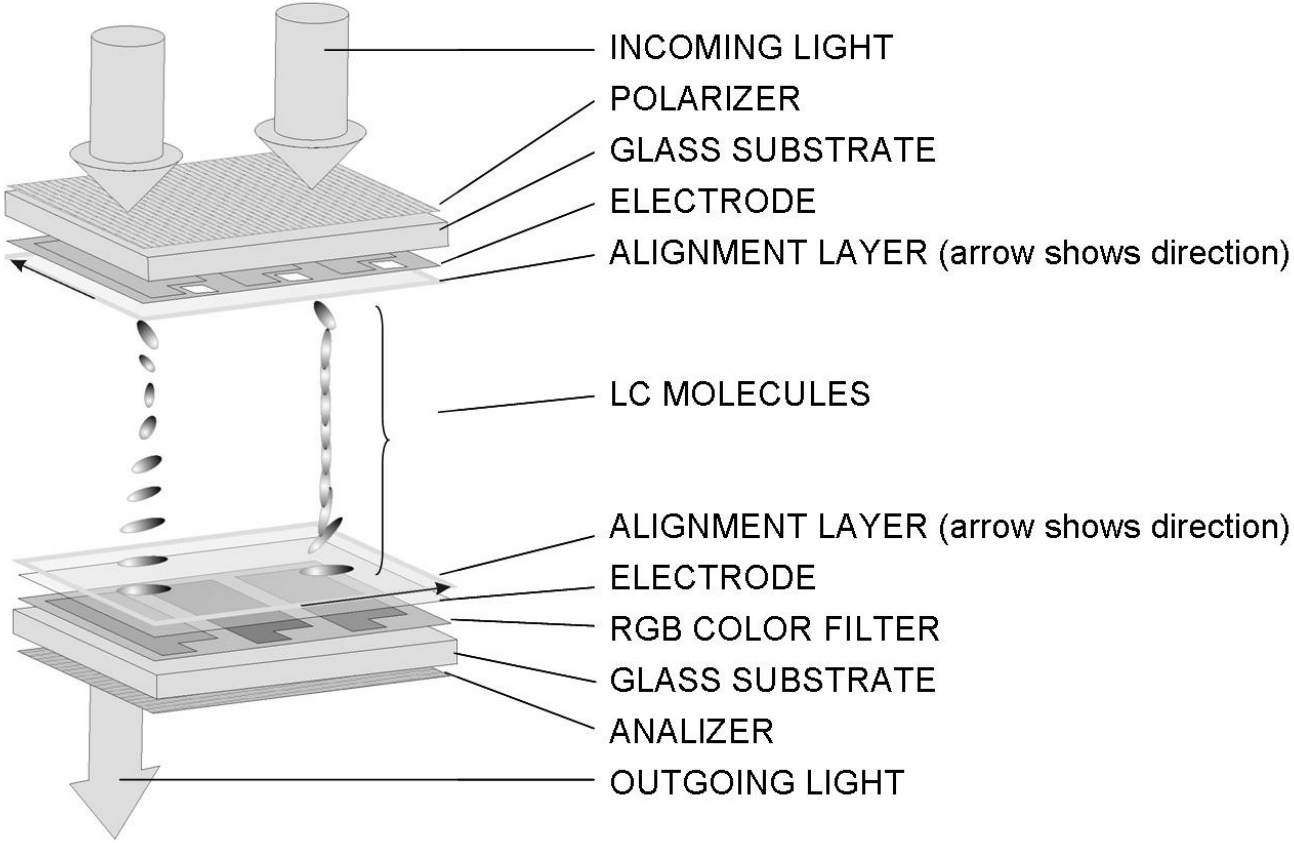

FIGURE 25.20 The basic operation principle of the twisted nematic (TN) cell.

Introduction to Organic Electronic and Optoelectronic Materials and Devices (Eds. Sun and Dalton) CRC Press, 2008. ISBN-10: 0849392845

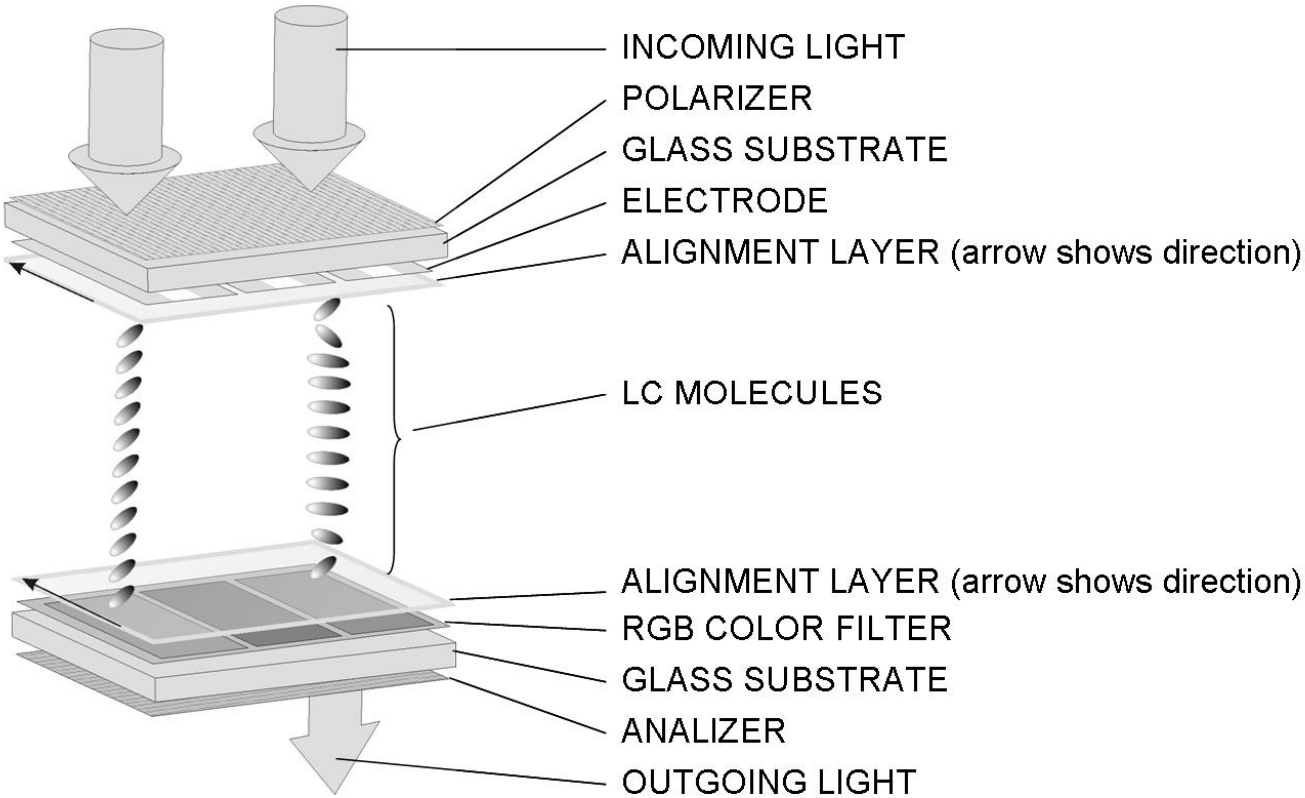

FIGURE 25.21 In-plane switching (IPS) mode liquid crystal (LC) display.

Introduction to Organic Electronic and Optoelectronic Materials and Devices (Eds. Sun and Dalton) CRC Press, 2008. ISBN-10: 0849392845

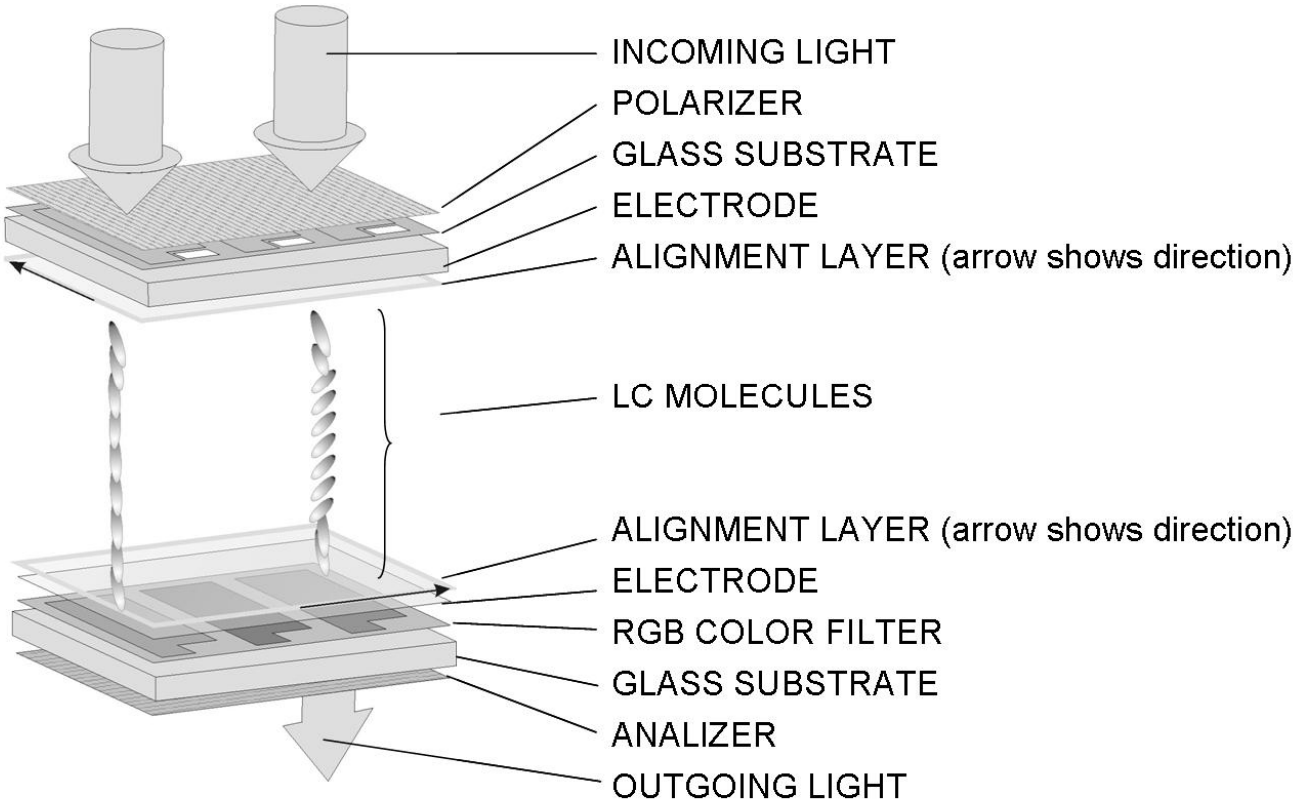

FIGURE 25.22 Vertical allignment (VA) mode liquid crystal (LC) display.

Introduction to Organic Electronic and Optoelectronic Materials and Devices (Eds. Sun and Dalton) CRC Press, 2008. ISBN-10: 0849392845

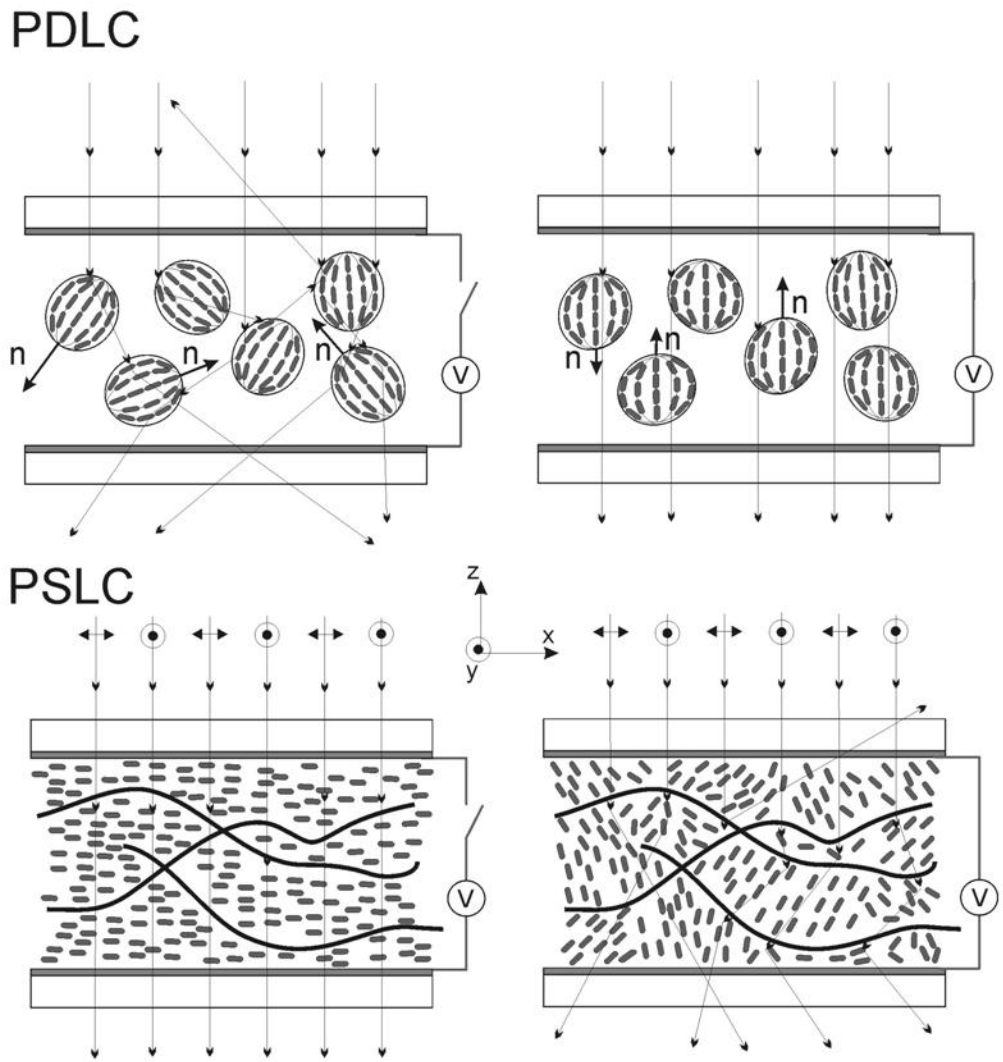

FIGURE 25.23 Schematic view and working principle of polymer/liquid crystal (LC) composites.

Introduction to Organic Electronic and Optoelectronic Materials and Devices (Eds. Sun and Dalton) CRC Press, 2008. ISBN-10: 0849392845

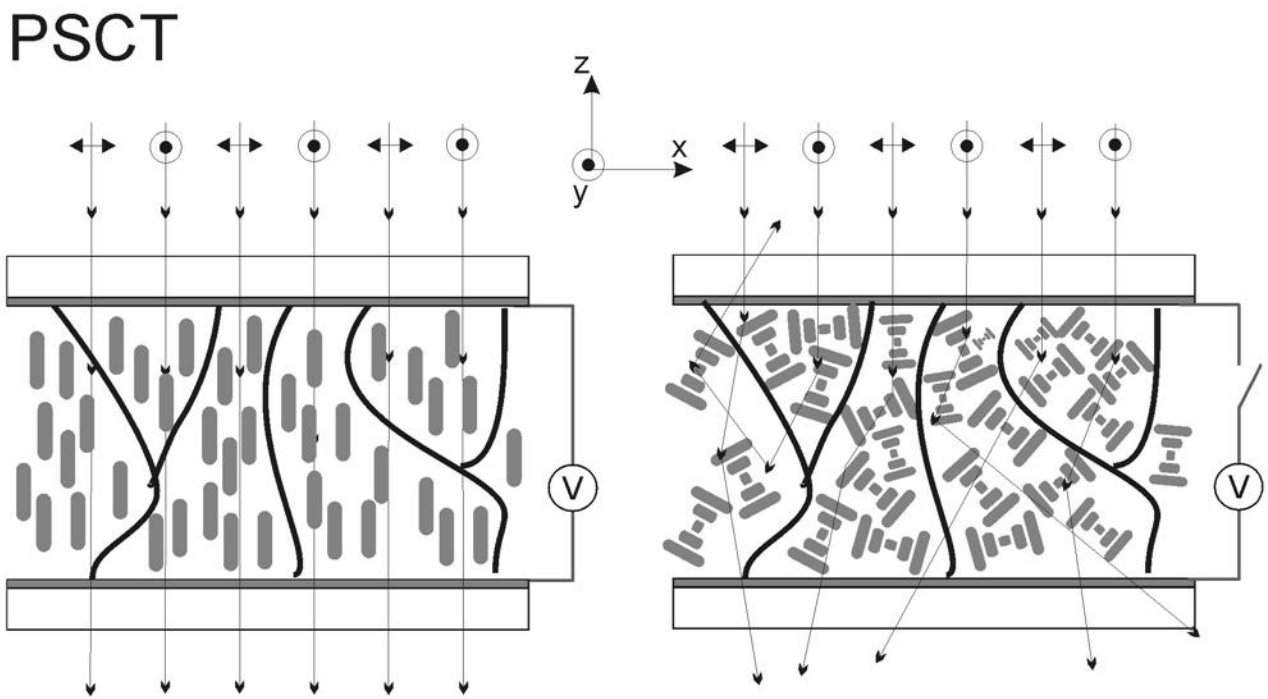

FIGURE 25.24 Schematic view of working principles of polymer-stabilized cholesteric liquid crystal (LC) light valve.